Parts Catalog

FARMTRAC

TRACTOR FARMTRAC 26H EXPORT EU,

Escorts Agri Machinery

Print Date: 30-Oct-2019

TABLE INDEX

Sr No.	Table Name	Table No.	Page No.
1	ENGINE ASSEMBLY MITSUBISHI MVS3L2-Z564ET-18.2kW@2500RPM	1	1-2
2	EXHAUST SYSTEM SUBASSEMBLY	2	3-4
3	DAMPER INPUT HST WITH HARDWARE SUBASSEMBLY	3	5-6
4	COOLING SYSTEM SUBASSEMBLY (HST AND EU)	4	7-8
5	AIR CLEANER SUBASSEMBLY	5	9-10
6	COOLER OIL SUBASSEMBLY (HST)	6	11-12
7	FUEL SYSTEM SUBASSEMBLY	7	13-14
8	FRAME FUEL TANK AND BRACKET HINGE ASSEMBLY	8	15-16
9	FUEL TANK SUBASSEMBLY	9	17-18
10	LINKAGE THROTTLE SUBASSEMBLY	10	19-20
11	LINKAGE ASSEMBLY DIFFERENTIAL LOCK CONTROL	11	21-22
12	LEVER MID PTO GEAR SHIFT SUBASSEMBLY	12	23-24
13	LEVER POSITION CONTROL SUBASSEMBLY	13	25-26
14	LEVER PTO GEAR SHIFT SUBASSEMBLY	14	27-28
15	JOYSTICK CONTROL SUBASSEMBLY	15	29-30
16	LEVER CONTROL 2WD 4WD SUBASSEMBLY	16	31-32
17	LEVER RANGE HIGH LOW MEDIUM GEAR SHIFT SUBASSEMBLY	17	33-34
18	SHAFT PROPELLER ASSEMBLY (4WD COMPACT HST)	18	35-36
19	GUARD ASSEMBLY PROPELLER SHAFT	19	37-38
20	HOUSING ASSEMBLY SWIVEL FRONT AXLE RH WITH HARDWARE SUBASSEMBLY (4WD COMPACT)	20	39-42
21	HOUSING ASSEMBLY SWIVEL FRONT AXLE LH WITH HARDWARE SUBASSEMBLY (4WD COMPACT)	21	43-46
22	PILLOW BLOCK SUBASSEMBLY FRONT	22	47-48
23	PILLOW BLOCK SUBASSEMBLY REAR	23	49-50
24	HOUSING ASSEMBLY FRONT AXLE CENTER BEAM SUBASSEMBLY	24	51-52
25	AXLE FRONT WITH CYLINDER AND LINK ASSEMBLY	25	53-54
26	AXLE FRONT SUBASSEMBLY	26	55-56
27	COVER ASSEMBLY GUARD STEERING CYLINDER	27	57-58
28	WHEEL STEERING AND UNIT STEERING SUBASSEMBLY	28	59-60
29	WHEEL AND TYRE ASSEMBLY FRONT 23x8.50-12 (M/s BKT -TURF)	29	61-62
30	TUBING POWER STEERING SUBASSEMBLY	30	63-66

Print Date: 30-Oct-2019

TABLE INDEX

Sr No.	Table Name	Table No.	Page No.
31	PEDAL SPEED CONTROL AND CRUISE CONTROL SUBASSEMBLY	31	67-70
32	DRIVE TRAIN INPUT FRONT HOUSING HST ASSEMBLY	32	71-72
33	HOUSING FRONT HST ASSEMBLY	33	73-74
34	HST UNIT SUBASSEMBLY WITH HARDWARE	34	75-76
35	DRIVE TRAIN 4WD SUBASSEMBLY (HST)	35	77-78
36	RETAINER AND GEAR PAIR INPUT SUB ASSEMBLY WITH HARDWARE (HST)	36	79-80
37	HOUSING ASSEMBLY INTERMEDIATE (HST)	37	81-82
38	CLUTCH WET PTO SUBASSEMBLY	38	83-84
39	HOUSING REAR AXLE CENTRE SUBASSEMBLY (HST)	39	85-86
40	GEAR AND DIFFERENTIAL REAR AXLE SUBASSEMBLY	40	87-88
41	DIFFERENTIAL LOCK SUBASSEMBLY	41	89-90
42	RETAINER BEARING DIFFERENTIAL SUBASSEMBLY LH	42	91-92
43	RETAINER BEARING DIFFERENTIAL SUBASSEMBLY RH	43	93-94
44	HOUSING REAR AXLE RH SUBASSEMBLY	44	95-96
45	HOUSING REAR AXLE LH SUBASSEMBLY	45	97-98
46	PTO REAR SHIFTING ASSEMBLY (HST)	46	99-100
47	PTO MID SHIFTING ASSEMBLY	47	101-102
48	RETAINER PTO BEARING AND SEAL ASSEMBLY	48	103-104
49	GEAR AND SHAFT PTO SUBASSEMBLY (HST)	49	105-106
50	PTO MID DROP BOX SUBASSEMBLY	50	107-108
51	GEARS AND SHAFT PTO SUBASSEMBLY (HST)	50A	109-112
52	PLATE INTERMEDIATE TRANSMISSION ASSEMBLY (Z-24)	51	113-114
53	GEAR DRIVE TRAIN RANGE ASSEMBLY (9+3)	52	115-116
54	RANGE GEAR SHIFTING ASSEMBLY (COMPACT)	53	117-118
55	HARDWARE BUCKLE UP TRANSMISSION AND REAR AXLE SUBASSEMBLY	54	119-120
56	HARDWARE BUCKLE UP ADAPTOR PLATE AND BACKEND SUBASSEMBLY	55	121-122
57	HARDWARE BUCKLE UP ADAPTOR PLATE & BACKEND SUBASSEMBLY	55	123-124
58	TRANSMISSION ASSEMBLY DRESSED UP	56	125-126
59	BRAKE LINKAGE SUB ASSEMBLY (HST)	57	127-128
60	WHEEL AND TYRE ASSEMBLY REAR 33x15.50-16.50 (M/s BKT -TURF)	58	129-130

Print Date: 30-Oct-2019

TABLE INDEX

Sr No.	Table Name	Table No.	Page No.
61	HYDRAULIC LIFT ASSEMBLY (COMPACT TRACTOR MODEL)	59	131-132
62	CYLINDER ASSY	60	133-134
63	INTERNAL LEVER ASSY	61	135-136
64	CONTROL LEVERS ASSY	63	137-138
65	PUMP HYDRAULIC LIFT ASSEMBLY	64	139-140
66	TUBING HYDRAULIC SUCTION SUBASSEMBLY	65	141-142
67	TUBING AUXILLARY VALVE SUBASSEMBLY	66	143-144
68	LINKAGE THREE POINT COMPACT TRACTOR SUBASSEMBLY	67	145-146
69	HITCH REAR SWINGING DRAWBAR SUBASSEMBLY	68	147-148
70	HARNESS SUBASSEMBLY	69	149-152
71	HOOD FRONT SUBASSEMBLY	70	153-156
72	LATCH ASSEMBLY HOOD FRONT	71	157-158
73	COVER ASSEMBLY ENGINE SIDE RH	72	159-160
74	COVER ASSEMBLY ENGINE SIDE LH	73	161-162
75	GUIDE SUPPORT AND GAS SPRING FRONT HOOD SUBASSEMBLY	74	163-164
76	GUIDE SUPPORT AND RADIATOR FRAME SUBASSEMBLY	75	165-166
77	HOOD REAR SUBASSEMBLY	76	167-168
78	ROPS FOLDABLE SUBASSEMBLY COMPACT	77	169-170
79	FENDER SUBASSEMBLY (HST NON JOYSTICK)	78	171-174
80	BOARD RUNNING RH AND LH SUBASSEMBLY	79	175-176
81	SEAT DRIVER SUBASSEMBLY (EXPORT)	80	177-178
82	MIRROR AND FRONT LAMP SUBASSEMBLY	81	179-180
83	DECAL AND BADGES MODEL IDENTIFICATION ASSEMBLY HST	82	181-182

Print Date: 30-Oct-2019

TABLE-1

ENGINE ASSEMBLY MITSUBISHI MVS3L2-Z564ET-18.2kW@2500RPM

Print Date: 30-Oct-2019

TABLE-1

ENGINE ASSEMBLY MITSUBISHI MVS3L2-Z564ET-18.2kW@2500RPM

Fig. No.	Part No.	Description	Qty
5	D10017460.9	CLAMP ASSEMBLY FUEL TUBE	1
6	D10567380.9	HOSE ASSEMBLY FUEL TANK RETURN	1
7	D10551060.9	BRACKET SUPPORT MUFFLER HORIZONTAL	1
8	D10536300.9	GASKET INTAKE ELBOW MITSUBISHI ENGINE (S3L2)	1
9	D10536290.9	ELBOW INTAKE MANIFOLD MITSUBISHI ENGINE (S3L2)	1
10	D81502510.9	BOLT M8X1.25X60-8.8 HEX HEAD FLANGED (WHITE PASSIVATED)	1
11	D82500230.9	SCREW M8X1.25X20-8.8 HEX HEAD FLANGED	1
12	D10524990.9	LEVER ALTERNATOR ADJUSTING	1
13	D84500450.9	STUD B M12X45-10.9	2
14	D10607060.9	FLYWHEEL ASSEMBLY (MITSUBISHI MVS3L2-W463JCET)	1
15	D87500570.9	PIN 9.5X20 PLAIN DOWEL	1
16	D81503200.9	BOLT M12X1.25X30-10.9 HEX HEAD	12
17	D10525000.9	GASKET REAR PLATE ENGINE	1
18	D10524940.9	ADAPTER ENGINE TRANSMISSION COUPLING	1
20	D10525010.9	SPACER ALTERNATOR ADJUSTMENT	1
22	D81500470.9	BOLT M10X1.50X115 HEX HEAD	1
23	D83500090.9	NUT M10X1.50-8 HEX	1
24	D86500050.9	WASHER M10 SPRING LOCK	1
25	D82500060.9	SCREW M8X1.25X30-8.8 HEX HEAD	1
26	D83500060.9	NUT M8X1.25-6 HEX	1
27	D85500050.9	WASHER M8 FLAT	1
28	D10776850.9	ENGINE ASSEMBLY MITSUBISHI MVS3L2-Z564ET-18.2KW@2500RPM	1
31	D85500140.9	WASHER M10 FLAT	1
32	D86500030.9	WASHER M8 SPRING LOCK	1
33	D10538690.9	BEARING BALL 6001 2RS	1
34	D87500720.9	PIN 6X20 PLAIN DOWEL	3
35	D86500030.9	WASHER M8 SPRING LOCK	4
36	D81500110.9	BOLT M8X1.25X20-8.8 HEX HEAD	4
37	D10809900.9	DAMPER ASSEMBLY	1
38	D10044920.9	DOWEL FLY-WHEEL	2
39	D81500060.9	BOLT M10X1.50X30-8.8 HEX HEAD	1

Print Date: 30-Oct-2019

TABLE-2

EXHAUST SYSTEM SUBASSEMBLY

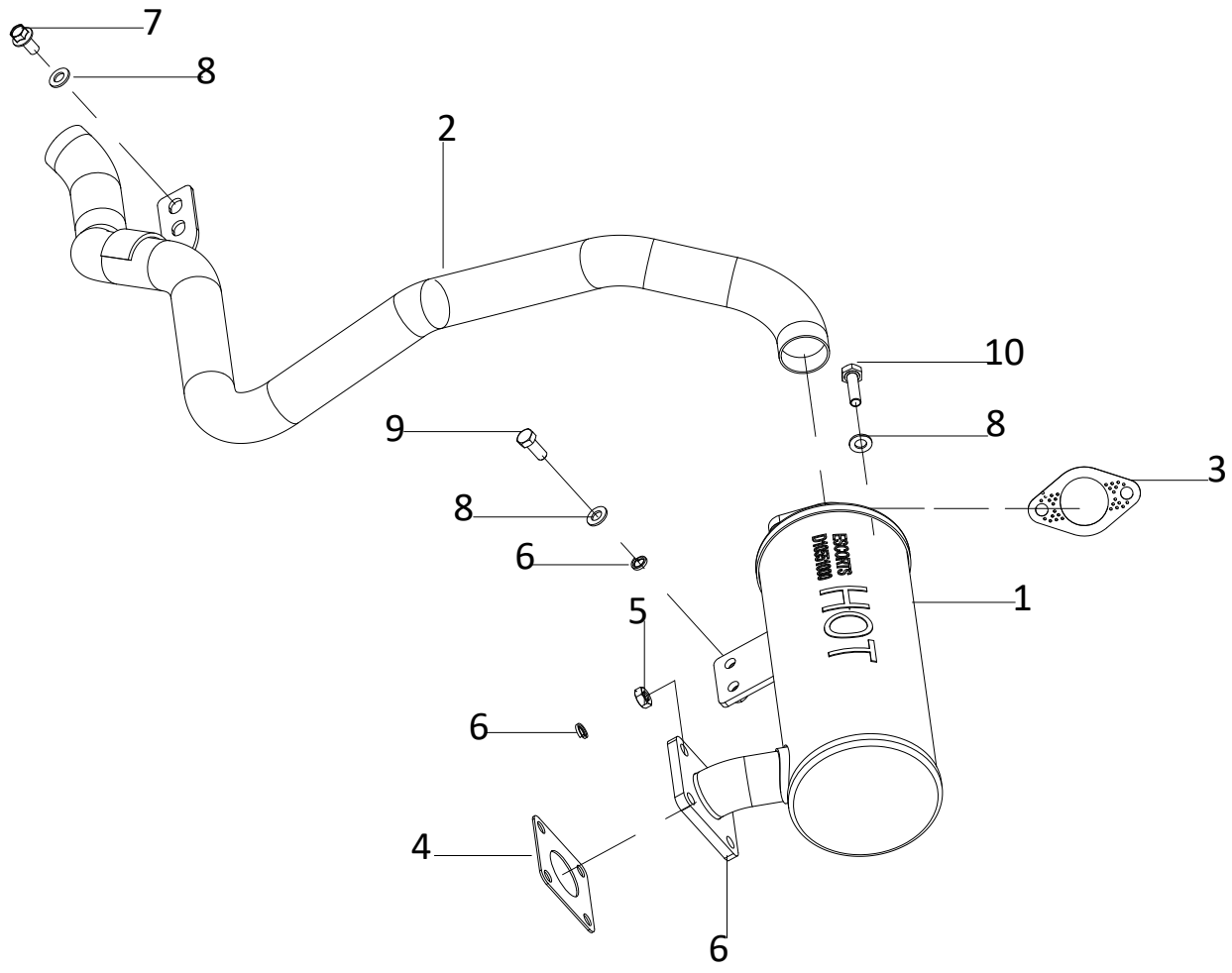

Print Date: 30-Oct-2019

TABLE-2

EXHAUST SYSTEM SUBASSEMBLY

Fig. No.	Part No.	Description	Qty
1	D10551000.9	MUFFLER ASSEMBLY HORIZONTAL(INSIDE)	1
2	D10551010.9	PIPE EXHAUST AND BRACKET ASSEMBLY	1
3	D10551080.9	GASKET MUFFLER OUTLET	1
4	D10551070.9	GASKET MUFFLER INLET	1
5	D83500060.9	NUT M8X1.25-6 HEX	4
6	D86500030.9	WASHER M8 SPRING LOCK	8
7	D81501580.9	BOLT M8X1.25X16 HEX HEAD FLANGED	2
8	D85500130.9	WASHER M8 FLAT	6
9	D81500110.9	BOLT M8X1.25X20-8.8 HEX HEAD	2
10	D81500310.9	SCREW M8X1.25X30-8.8 HEX HEAD	2

4

Print Date: 30-Oct-2019

TABLE-3

DAMPER INPUT HST WITH HARDWARE SUBASSEMBLY

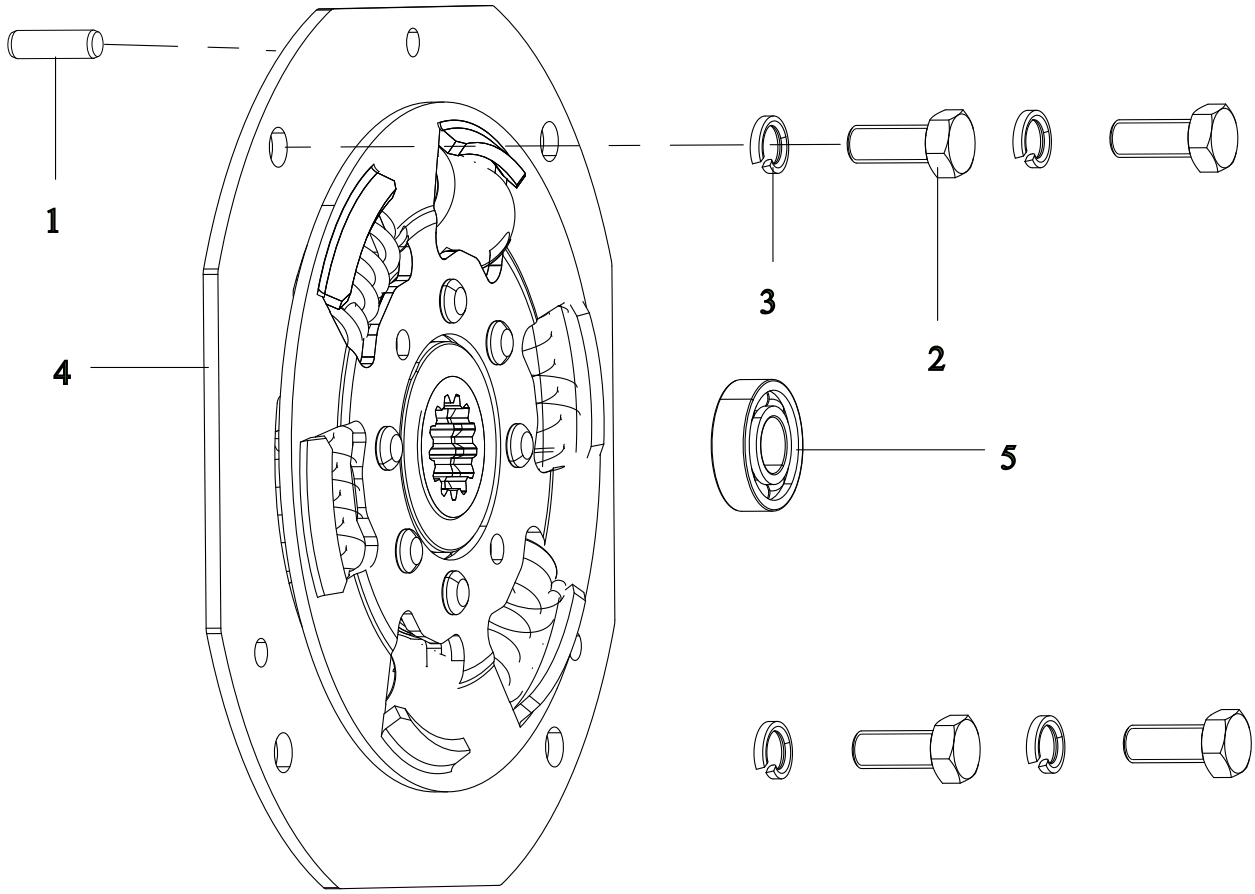

5

Print Date: 30-Oct-2019

TABLE-3

DAMPER INPUT HST WITH HARDWARE SUBASSEMBLY

Fig. No.	Part No.	Description	Qty
1	D87500720.9	PIN 6X20 PLAIN DOWEL	3
2	D81500110.9	BOLT M8X1.25X20-8.8 HEX HEAD	4
3	D86500030.9	WASHER M8 SPRING LOCK	4
4	D10809900.9	DAMPER ASSEMBLY	1
5	D10538690.9	BEARING BALL 6001 2RS	1

6

Print Date: 30-Oct-2019

TABLE-4

COOLING SYSTEM SUBASSEMBLY (HST AND EU)

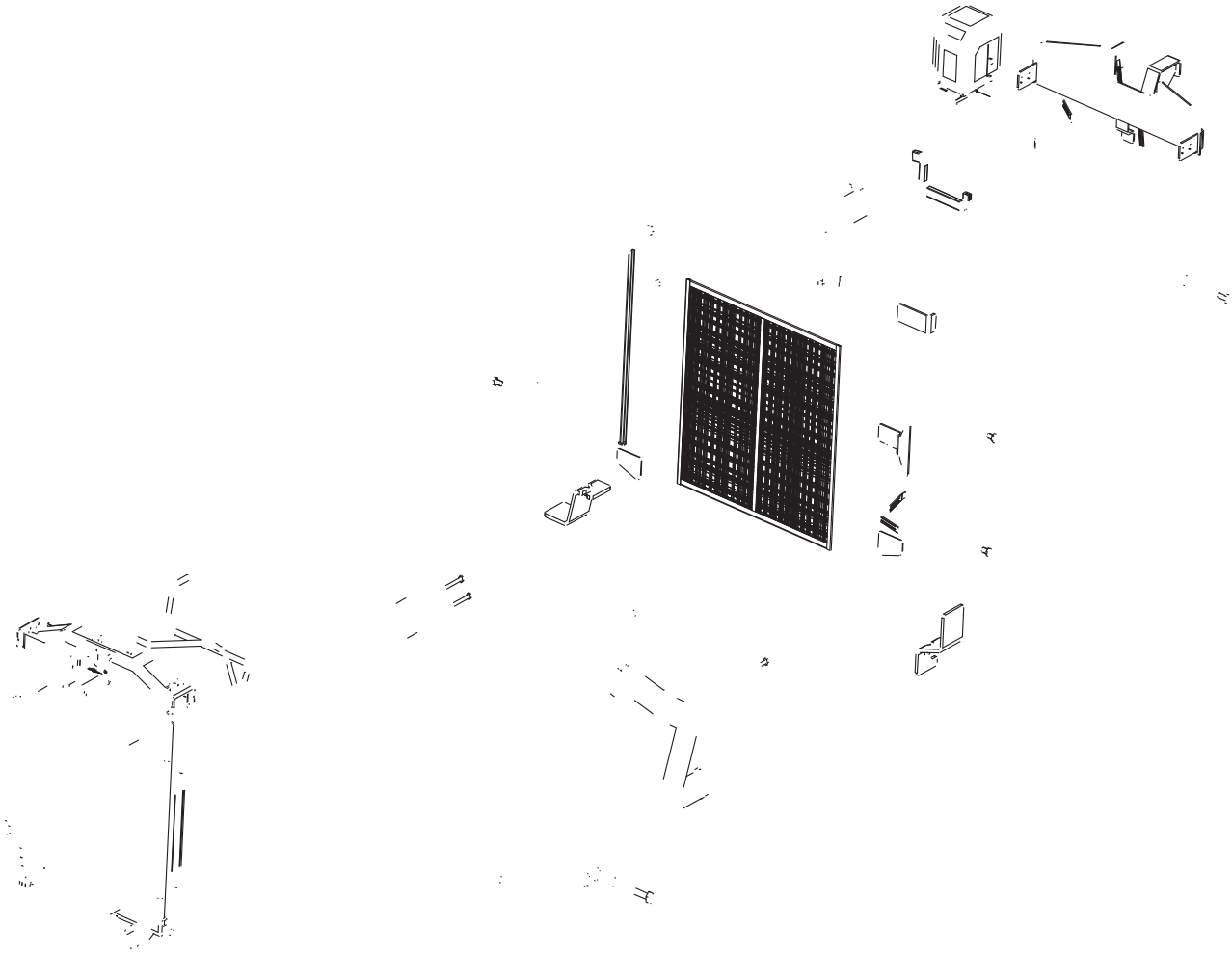

Print Date: 30-Oct-2019

TABLE-4

COOLING SYSTEM SUBASSEMBLY (HST AND EU)

Fig. No.	Part No.	Description	Qty
1	D10558670.9	RADIATOR AND SHROUD ASSEMBLY	1
1-1	D10558670AE.9	RADIATOR AND SHROUD ASSEMBLY	1
2	D10521030.9	CAP ASSEMBLY PRESSURE RADIATOR (M/S SM AUTO)	1
3	D10560000.9	PIPE AND CLIP ASSEMBLY RECOVERY BOTTLE OVERFLOW	1
4	D10587760.9	FRAME ASSEMBLY RADIATOR SIDE LH	5
5	D83500060.9	NUT M8X1.25-6 HEX	31
6	D83500070.9	NUT M6X1.00-6 HEX	8
7	D10587750.9	FRAME ASSEMBLY RADIATOR SIDE RH	1
8	D10717700.9	FRAME ASSEMBLY RADIATOR	1
9	D10801990.9	BOTTLE RADIATOR ASSEMBLY RECOVERY	1
10	D10555800.9	PLATE BAFFLE RADIATOR FRAME	1
11	D10547430.9	MESH ASSEMBLY RADIATOR FRONT	1
12	D10557900.9	SPACER FAN WATER COOLING	1
13	D10521940.9	FAN ASSEMBLY WATER COOLING	1
14	D10547480.9	HOSE RADIATOR TOP	1
15	D10547490.9	HOSE RADIATOR BOTTOM	1
16	D10329500.9	CLAMP HOSE WORM DRIVE 55MM	4
17	D86500030.9	WASHER M8 SPRING LOCK	11
18	D81500590.9	BOLT M8X1.25X25-6.6 HEX HEAD	3
19	D85500050.9	WASHER M8 FLAT	11
20	D81500110.9	BOLT M8X1.25X20-8.8 HEX HEAD	4
21	D82500160.9	SCREW M10X1.50X45-8.8P HEX HEAD	4
22	D86500050.9	WASHER M10 SPRING LOCK	4
23	D10668970.9	BEADING RADIATOR FRAME TOP	1
24	D10559580.9	FOAM SEALING RADIATOR BOTTOM	1
25	D81500360.9	BOLT M6X1.00X16-9.8 HEX HEAD	2
26	D85500040.9	WASHER M6 FLAT	2
27	D82500070.9	SCREW M8X1.25X15-6.8 HEX HEAD	4
28	D86500040.9	WASHER M6 SPRING LOCK	9
29	D81503520.9	BOLT M6X1.0X50-10.9 HEX HEAD	4
30	D85500010.9	WASHER M10 FLAT	4
31	D10672200.9	WASHER FAN BOLT LOCK PLATE	2

Print Date: 30-Oct-2019

TABLE-5

AIR CLEANER SUBASSEMBLY

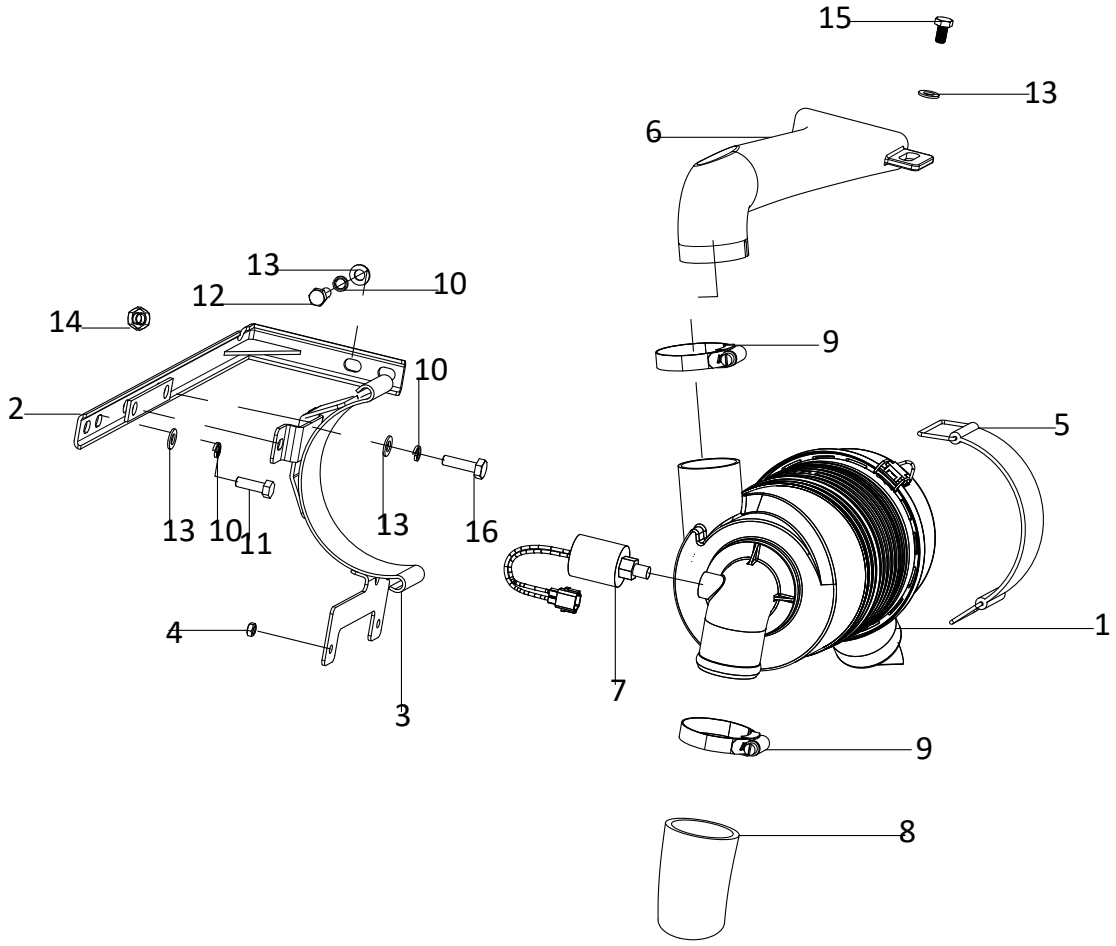

Print Date: 30-Oct-2019

TABLE-5

AIR CLEANER SUBASSEMBLY

Fig. No.	Part No.	Description	Qty
1	D10517880.9	CLEANER ASSEMBLY ENGINE AIR	1
2	D10522000.9	BRACKET ASSEMBLY AIR CLEANER	1
3	D10521960AD.9	BRACKET ASSEMBLY AIR CLEANER HOLDING REAR	1
4	D83500070.9	NUT M6X1.00-6 HEX	2
5	D10521990.9	RUBBER STRAP ASSEMBLY AIR CLEANER HOLDING	1
6	D10522380.9	PIPE AIR CLEANER INTAKE	1
7	D10532900.9	INDICATOR RESTRICTION AIR CLEANER	1
8	D10521950.9	HOSE AIR CLEANER TO INTAKE MANIFOLD	1
9	D10017170.9	CLAMP ASSEMBLY 70MM DIAMETER	3
10	D86500030.9	WASHER M8 SPRING LOCK	6
11	D81500590.9	BOLT M8X1.25X25-6.6 HEX HEAD	2
12	D81500110.9	BOLT M8X1.25X20-8.8 HEX HEAD	2
13	D85500050.9	WASHER M8 FLAT	9
14	D83500060.9	NUT M8X1.25-6 HEX	2
15	D82500070.9	SCREW M8X1.25X15-6.8 HEX HEAD	1
16	D81500310.9	SCREW M8X1.25X30-8.8 HEX HEAD	2

Print Date: 30-Oct-2019

TABLE-6

COOLER OIL SUBASSEMBLY (HST)

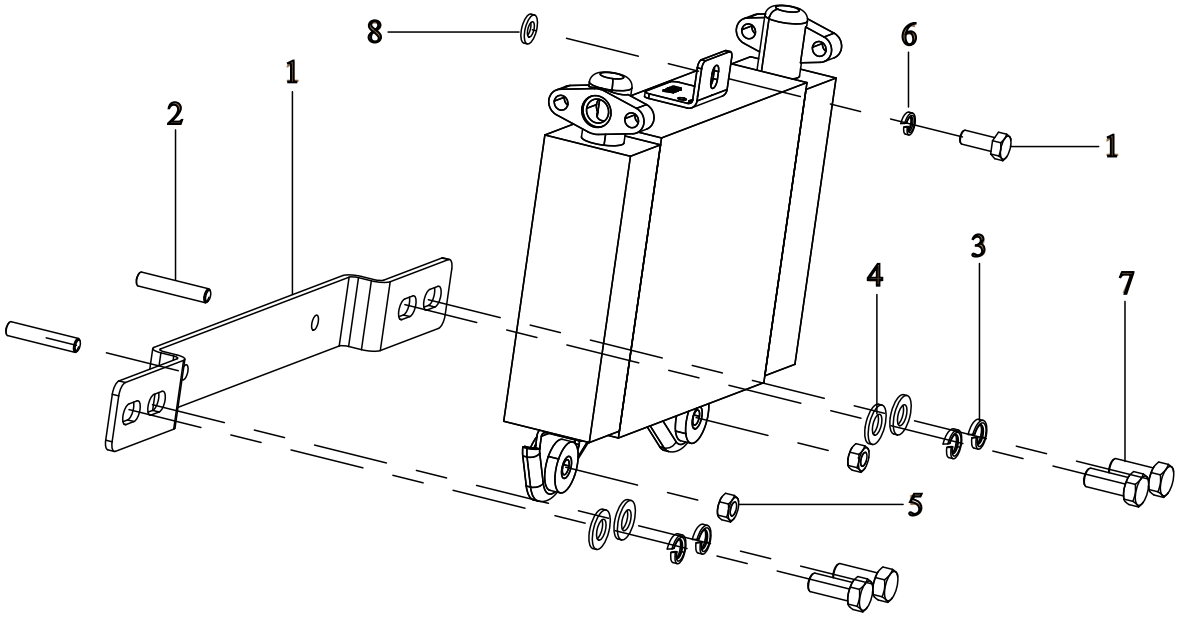

11

Print Date: 30-Oct-2019

TABLE-6

COOLER OIL SUBASSEMBLY (HST)

Fig. No.	Part No.	Description	Qty
1	D10600480.9	BRACKET SUPPORT OIL COOLER ASSEMBLY	1
2	D84500230.9	STUD B M6X1X33-8.8	2
3	D86500030.9	WASHER M8 SPRING LOCK	4
4	D85500050.9	WASHER M8 FLAT	4
5	D83500220.9	NUT M6X1.00-5 HEX	2
6	D86500040.9	WASHER M6 SPRING LOCK	1
7	D81500110.9	BOLT M8X1.25X20-8.8 HEX HEAD	4
8	D85500040.9	WASHER M6 FLAT	1
9	D81500360.9	BOLT M6X1.00X16-9.8 HEX HEAD	1
10	D10713560.9	COOLER OIL ASSEMBLY	1

Print Date: 30-Oct-2019

TABLE-7

FUEL SYSTEM SUBASSEMBLY

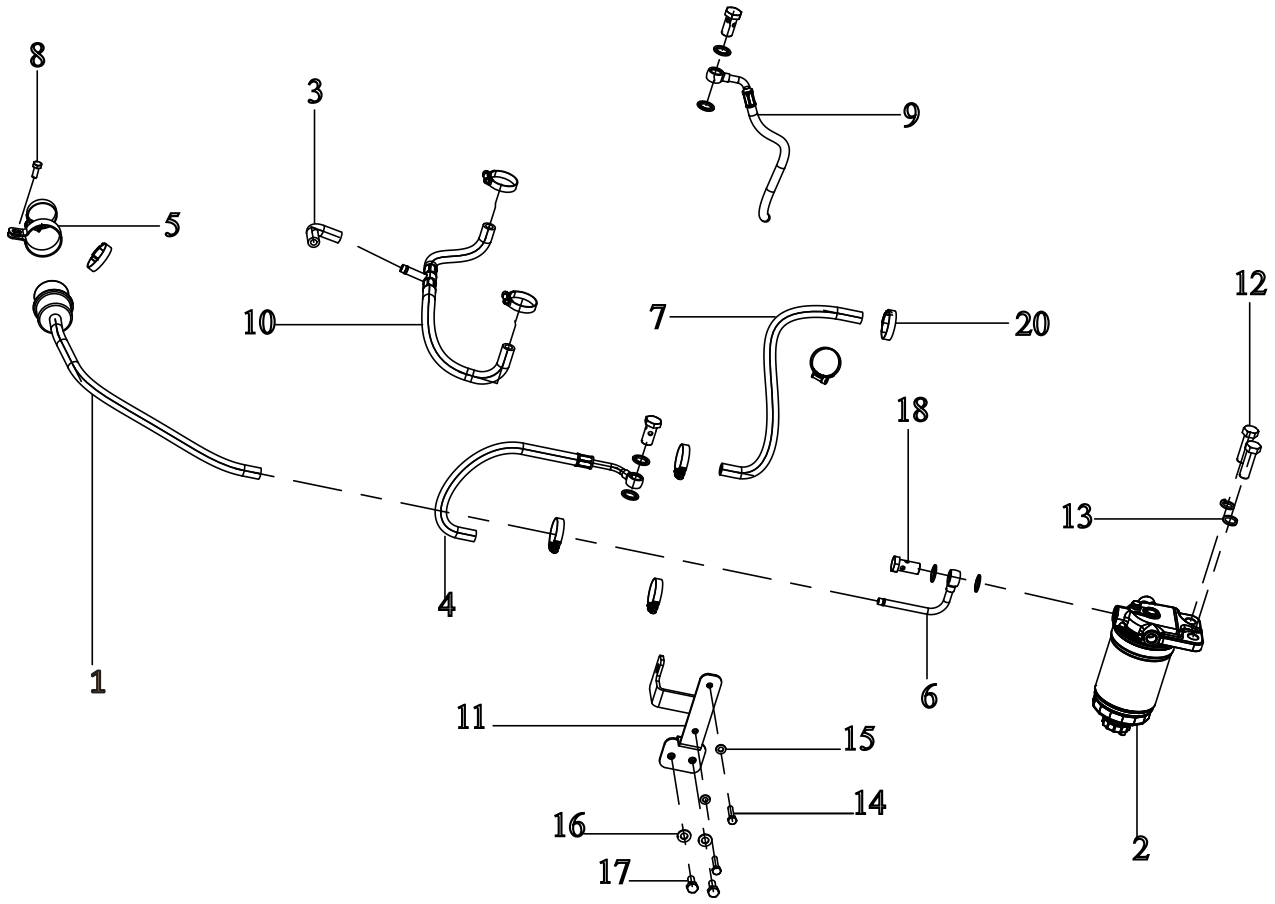

13

Print Date: 30-Oct-2019

TABLE-7

FUEL SYSTEM SUBASSEMBLY

Fig. No.	Part No.	Description	Qty
1	D10611450.9	STRAINER FUEL TANK (COMPACT HST TRACTOR)	1
2	D10562120.9	FILTER ASSEMBLY FUEL SPIN TYPE (ENGINE MITSUBISHI)	1
3	D10611470.9	HOSE TEE CONNECTOR TO FUEL STRAINER	1
4	D10750680.9	HOSE ASSEMBLY FUEL FILTER TO FUEL FEED PUMP	1
5	D10568760.9	CLAMP FUEL STRAINER MOUNTING	1
6	D10750660.9	TUBE ASSEMBLY STRAINER TO FUEL FILTER INLET	1
7	D10711080.9	HOSE ASSEMBLY FUEL PUMP TO FIP	1
8	D81500360.9	BOLT M6X1.00X16-9.8 HEX HEAD	1
9	D10567380.9	HOSE ASSEMBLY FUEL TANK RETURN	1
10	D10611460.9	HOSE ASSEMBLY FUEL TANK TO FUEL STRAINER HOSE	1
11	D10750630.9	BRACKET ASSEMBLY FUEL PUMP MOUNTING	1
12	D81500540.9	BOLT M12X1.75X40-9.8 HEX HEAD	2
13	D86500020.9	WASHER M12 SPRING LOCK	2
14	D10466130.9	BOLT M6X30-5.8 HEX HEAD (FTES SRUBA M6X30-5.8)	2
15	D85500040.9	WASHER M6 FLAT	2
16	D85500050.9	WASHER M8 FLAT	2
17	D81500660.9	BOLT M8X1.25X20-9.8 HEX HEAD	2
18	D10012590.9	BOLT M14X1.5X25.5 HEX HEAD PIPE UNION	3
19	D10513210.9	WASHER BONDED SEAL 14.7X22.0X1.5	6
20	D10017460.9	CLAMP ASSEMBLY FUEL TUBE	9

Print Date: 30-Oct-2019

TABLE-8

FRAME FUEL TANK AND BRACKET HINGE ASSEMBLY

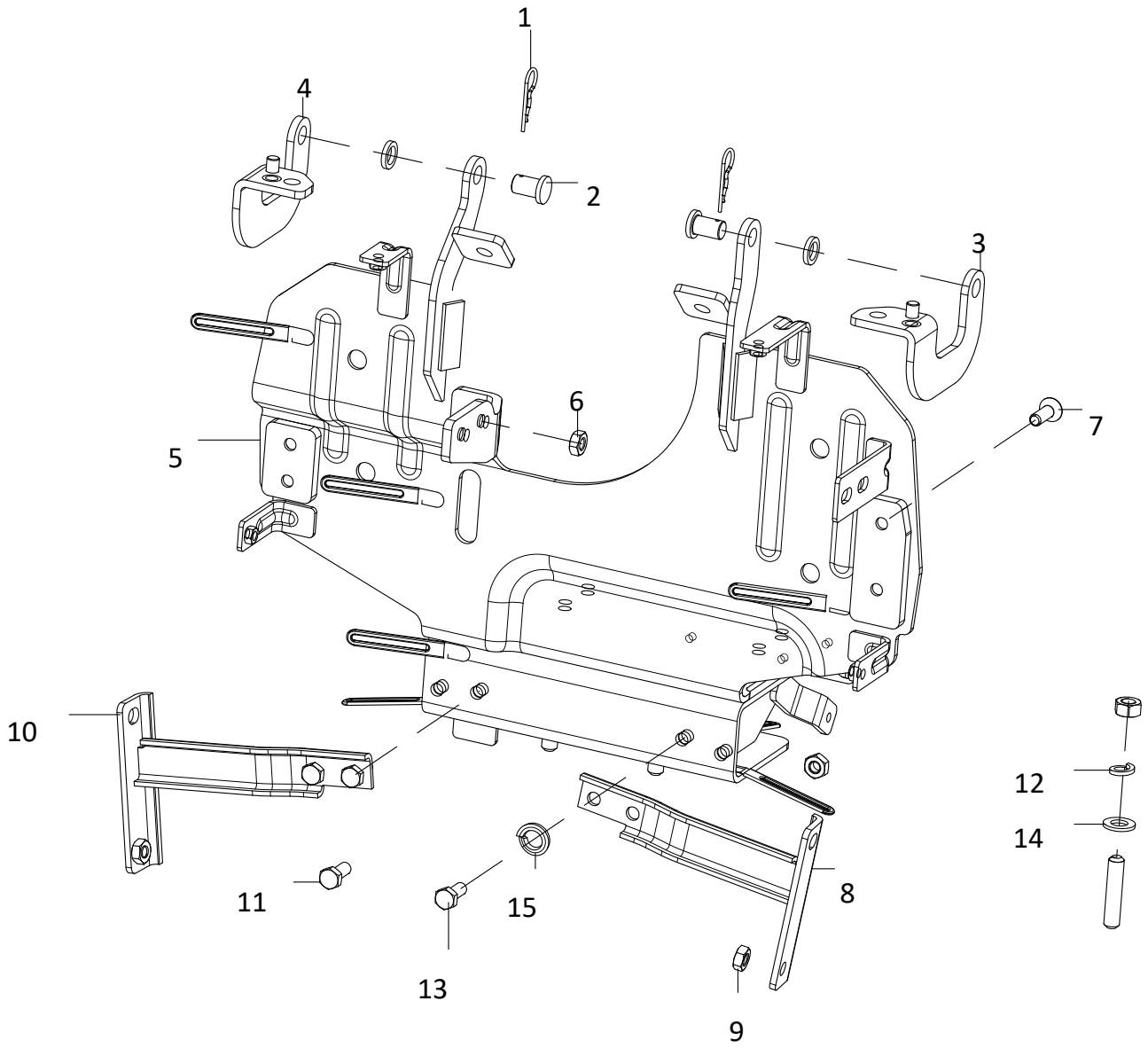

Print Date: 30-Oct-2019

TABLE-8

FRAME FUEL TANK AND BRACKET HINGE ASSEMBLY

Fig. No.	Part No.	Description	Qty
1	D10565520.9	PIN SPRING RETAINING 2X40	2
2	D10560960.9	PIN HINGE ASSEMBLY FRONT HOOD	2
3	D10581070.9	BRACKET LH HINGE FRONT HOOD	1
4	D10581060.9	BRACKET RH HINGE FRONT HOOD	1
5	D10560480.9	FRAME ASSEMBLY FUEL TANK	1
6	D83500110.9	NUT M8X1.25-8 HEX	8
7	D82500760.9	SCREW M8X1.25X25-12.9 COUNTERSUNK HEAD	4
8	D10566450.9	BRACKET ASSEMBLY LOWER COVER MOUNTING LH	1
9	D83500060.9	NUT M8X1.25-6 HEX	2
10	D10566420.9	BRACKET ASSEMBLY LOWER COVER MOUNTING RH	1
11	D81500280.9	BOLT M10X1.50X25-9.8 HEX HEAD	4
12	D86500090.9	WASHER M10 SPRING LOCK	4
13	D81500110.9	BOLT M8X1.25X20-8.8 HEX HEAD	4
14	D85500140.9	WASHER M10 FLAT	4
15	D86500030.9	WASHER M8 SPRING LOCK	4

Print Date: 30-Oct-2019

TABLE-9

FUEL TANK SUBASSEMBLY

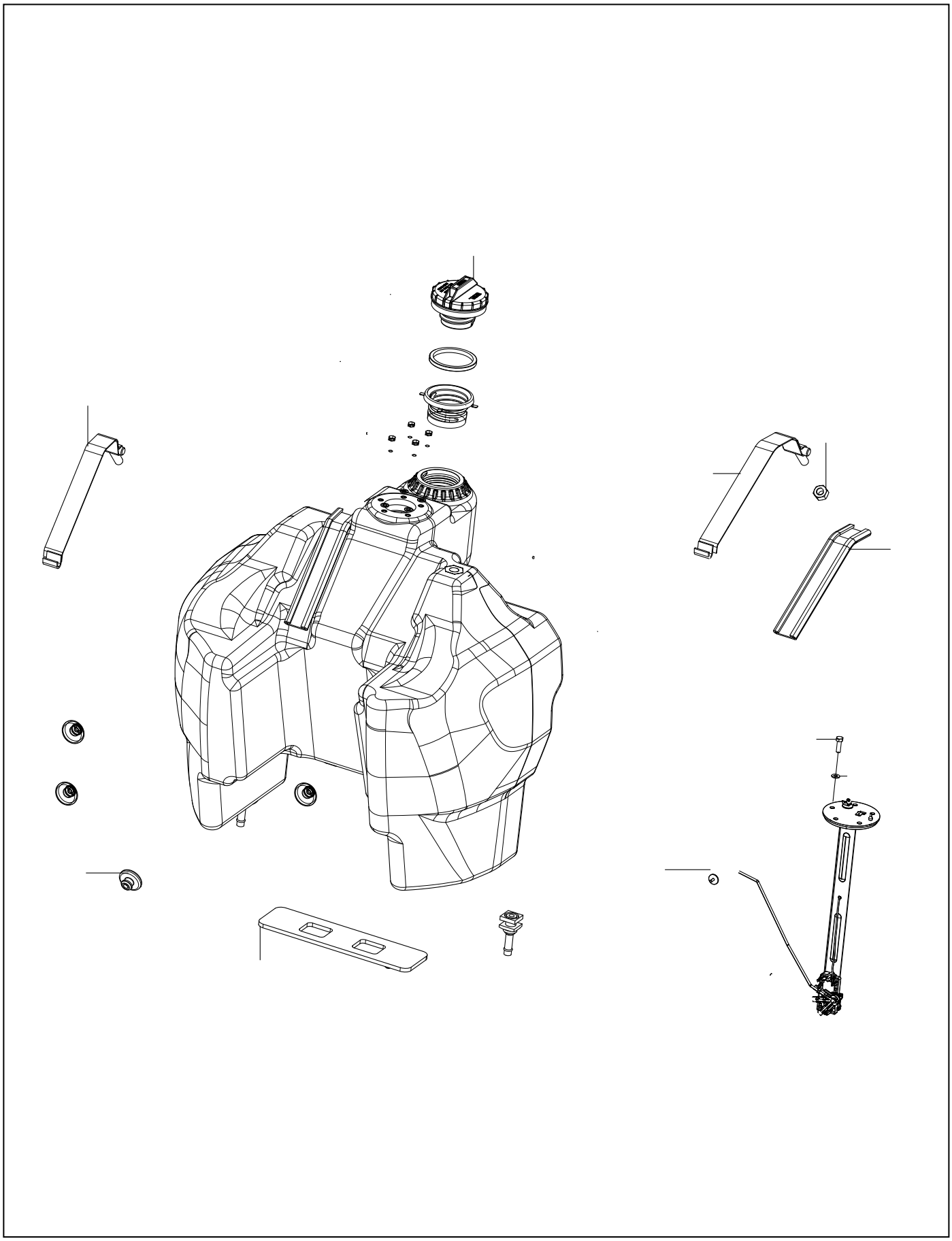

Print Date: 30-Oct-2019

TABLE-9

FUEL TANK SUBASSEMBLY

Fig. No.	Part No.	Description	Qty
1	D85500090.9	WASHER M5 FLAT	5
2	D10560410.9	FUEL TANK AND CAP ASSEMBLY (PLASTIC)	1
2-1	D10560410AF.9	FUEL TANK AND CAP ASSEMBLY (PLASTIC)	1
7	D10560470.9	CAP ASSEMBLY FUEL TANK	1
8	D82501120.9	SCREW M5X0.80X16-6.6 HEX HEAD	5
9	D10562570.9	FLOAT ASSEMBLY FUEL TANK	1
10	D10583340.9	FUEL TANK STRAP ASSEMBLY RH	1
11	D10562340.9	GROMMET FUEL TANK	4
12	D83500090.9	NUT M10X1.50-8 HEX	2
13	D10562360.9	PAD FUEL TANK LOWER	1
14	D10562500.9	PAD FUEL TANK STRAP	2
15	D10562510.9	STRAP ASSEMBLY FUEL TANK	1

Print Date: 30-Oct-2019

TABLE-10

LINKAGE THROTTLE SUBASSEMBLY

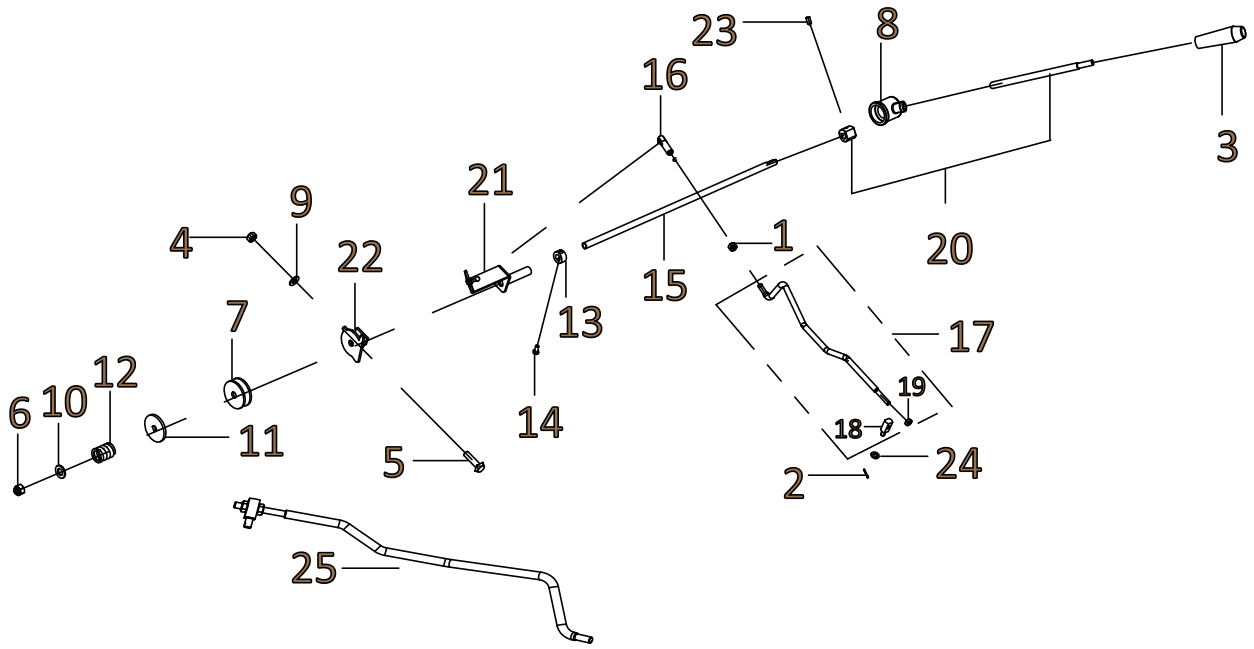

Print Date: 30-Oct-2019

TABLE-10

LINKAGE THROTTLE SUBASSEMBLY

Fig. No.	Part No.	Description	Qty
1	D81000400.9	NUT 1/4"-28 HEX	1
2	D88400010.9	PIN 1.6X12.5 COTTER	1
3	D10511400.9	KNOB HAND THROTTLE CONTROL LEVER	1
4	D83000080.9	NUT 5/16"-18 HEX	1
5	D81000670.9	BOLT 5/16"-24X1.25" SQUARE HEAD	1
6	D10016890.9	NUT 3/8"-24 HEX	1
7	D10018170.9	DISC THROTTLE CONTROL	2
8	D10586270.9	CAP HAND THROTTLE	1
9	D10018690.9	WASHER 5/16" FLAT	1
10	D85000050.9	WASHER 3/8" FLAT	1
11	D10017960.9	PLATE THROTTLE CONTROL	1
12	D10016480.9	SPRING GOVERNOR MANUAL CONTROL LEVER	1
13	D10017970.9	STOP THROTTLE CONTROL LEVER	1
14	D82500030.9	SCREW M5X0.80X10-6.6 HEX HEAD	1
15	D10600190.9	LEVER HAND THROTTLE	1
16	D10614240.9	CONNECTOR ASSEMBLY THROTTLE CONTROL ROD	1
17	D10614250.9	ROD TIE AND CLEVIS ASSEMBLY HAND THROTTLE CONTROL	1
18	D10542760.9	TRUNION PULL TO STOP ROD	1
19	D83500070.9	NUT M6X1.00-6 HEX	2
20	D10586240.9	LEVER ASSEMBLY HAND THROTTLE CONTROL	1
21	D10615330.9	ARM ASSEMBLY HAND THROTTLE CONTROL	1
22	D10600610.9	PLATE ASSEMBLY THROTTLE CONTROL	1
23	D82501690.9	SCREW M6X1.00X12 GRUB (LOCTITE PRE COATED)	1
24	D85500040.9	WASHER M6 FLAT	1
25	D10614250AE.9	ROD TIE AND CLEVIS ASSEMBLY HAND THROTTLE CONTROL	1

Print Date: 30-Oct-2019

TABLE-11

LINKAGE ASSEMBLY DIFFERENTIAL LOCK CONTROL

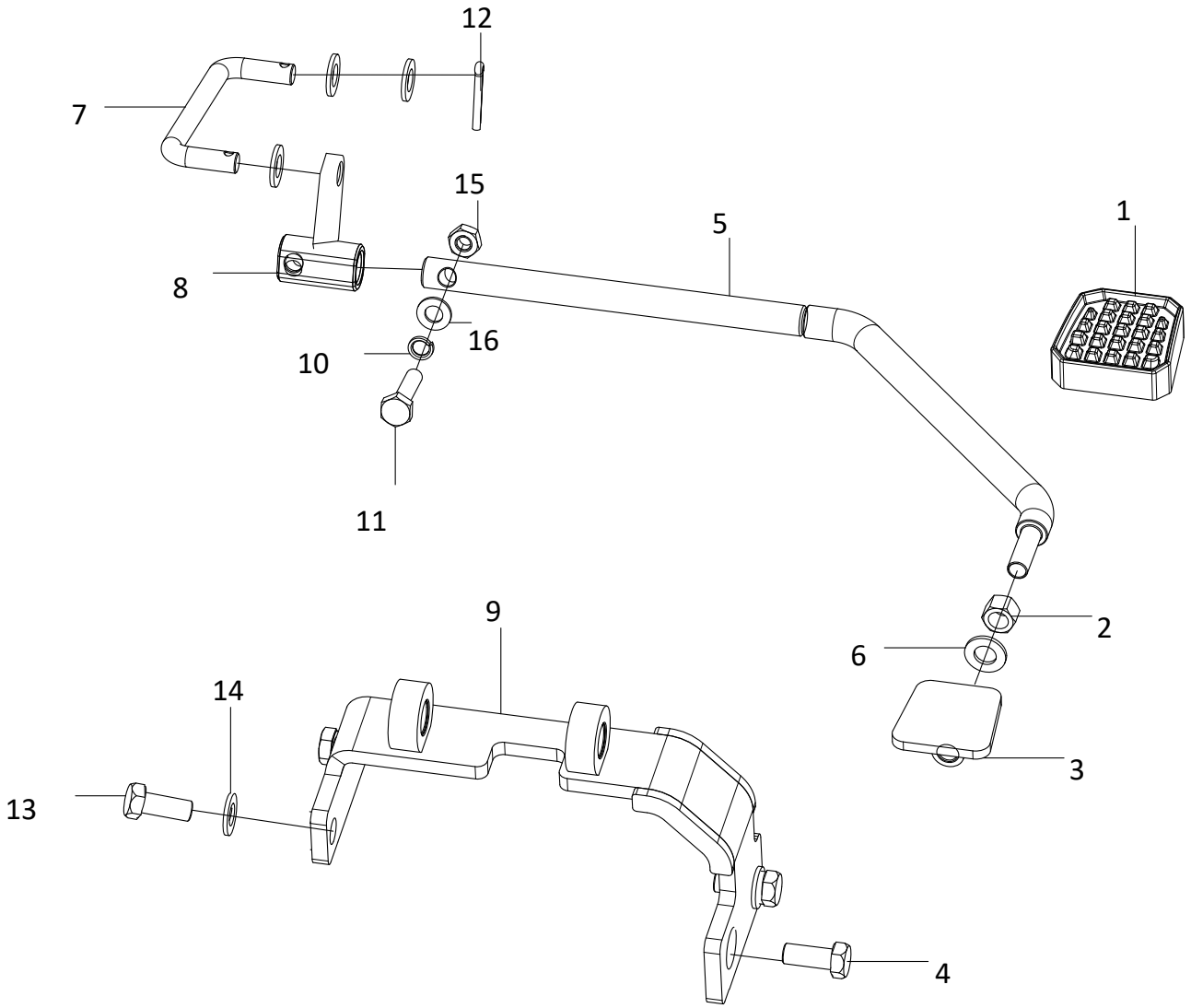

Print Date: 30-Oct-2019

TABLE-11

LINKAGE ASSEMBLY DIFFERENTIAL LOCK CONTROL

Fig. No.	Part No.	Description	Qty
1	D10555660.9	COVER RUBBER FOOT THROTTLE PEDAL	1
2	D83500210.9	NUT M10X1.50-5 HEX	1
3	D10609630.9	PEDAL TOP ASSEMBLY DIFFERENTIAL LOCK	1
4	D10101750.9	BOLT M10X1.50X25-8.8 HEX HEAD	2
5	D10603280.9	PEDAL ASSEMBLY DIFFERENTIAL LOCK	1
6	D85500140.9	WASHER M10 FLAT	7
7	D10740930.9	ROD TIE ASSEMBLY DIFFERENTIAL LOCK	1
8	D10603400.9	LEVER ASSEMBLY DIFFERENTIAL LOCK	1
9	D10736390.9	BRACKET ASSEMBLY DIFFERENTIAL LOCK PEDAL MOUNTING	1
10	D86500030.9	WASHER M8 SPRING LOCK	1
11	D81500030.9	BOLT M8X1.25X35-6.6 HEX HEAD	1
12	D88400040.9	PIN 3.2X25.0 COTTER	2
13	D81500060.9	BOLT M10X1.50X30-8.8 HEX HEAD	2
14	D86500090.9	WASHER M10 SPRING LOCK	4
15	D83500110.9	NUT M8X1.25-8 HEX	1
16	D85500050.9	WASHER M8 FLAT	1

Print Date: 30-Oct-2019

TABLE-12

LEVER MID PTO GEAR SHIFT SUBASSEMBLY

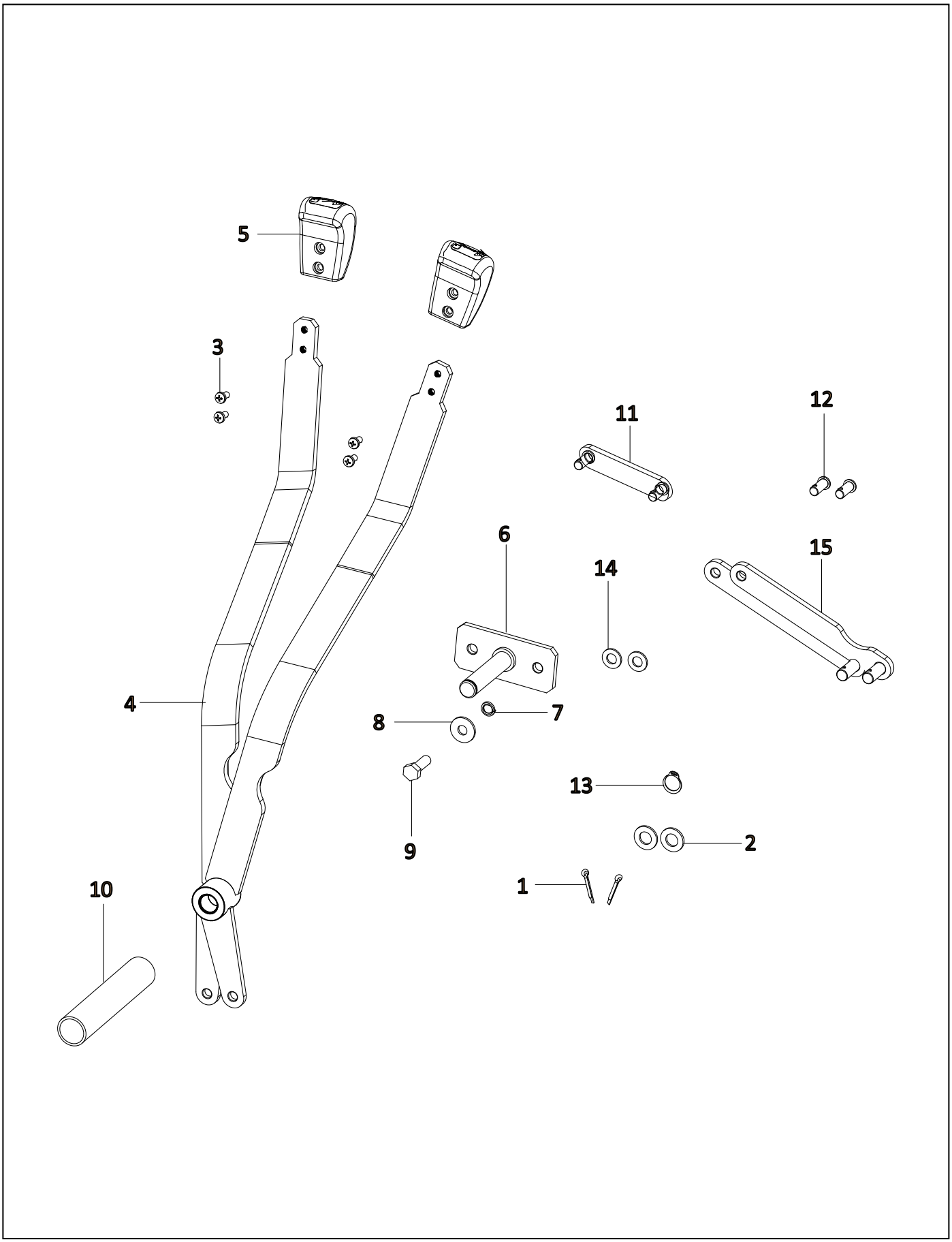

Print Date: 30-Oct-2019

TABLE-12

LEVER MID PTO GEAR SHIFT SUBASSEMBLY

Fig. No.	Part No.	Description	Qty
1	D10013460.9	PIN 1/8"X0.75" COTTER	2
2	D85500140.9	WASHER M10 FLAT	1
3	D82501160.9	SCREW M5X0.80X10 CROSS RECESSED PAN HEAD	2
4	D10556940.9	LEVER AND HUB POSITION CONTROL ASSEMBLY	1
5	D10609240.9	KNOB ASSEMBLY LEVER MID PTO GEAR SHIFT	1
6	D10556780.9	LEVER HOLDING BRACKET POSITION AND DRAFT CONTROL ASSEMBLY	1
7	D86500030.9	WASHER M8 SPRING LOCK	2
8	D10009600.9	WASHER 8.5X22 FLAT PHOSPHATED	2
9	D81500590.9	BOLT M8X1.25X25-6.6 HEX HEAD	2
10	D10666300.9	SLEEVE LEVER HAND OPERATED (PVC)	1
11	D10658830.9	LINK ASSEMBLY DRAFT CONTROL	1
12	D93400020.9	PIN 5/16"X.76" CLEVIS	2
13	D90000180.9	CIRCLIP A15X0.90 SB	1
14	D85500730.9	WASHER 30X15X1.2 THRUST	1
15	D10866570.9	LINK CONNECTING ASSEMBLY MID PTO GEAR SHIFT	1

Print Date: 30-Oct-2019

TABLE-13

LEVER POSITION CONTROL SUBASSEMBLY

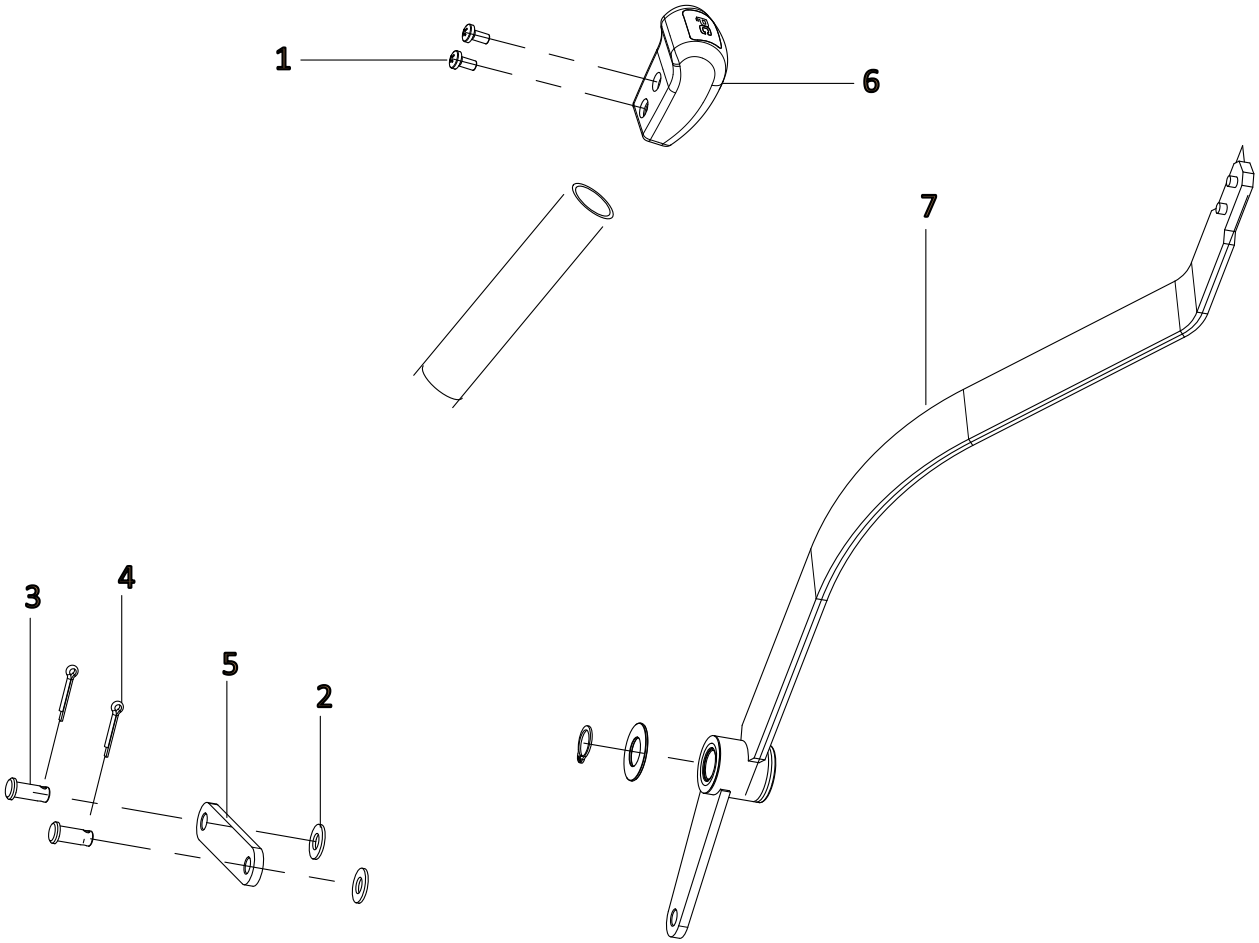

Print Date: 30-Oct-2019

TABLE-13

LEVER POSITION CONTROL SUBASSEMBLY

Fig. No.	Part No.	Description	Qty
1	D82501160.9	SCREW M5X0.80X10 CROSS RECESSED PAN HEAD	2
2	D10006010.9	WASHER 8.5X18 FRICTION	4
3	D93400020.9	PIN 5/16"X.76" CLEVIS	2
4	D10013460.9	PIN 1/8"X0.75" COTTER	2
5	D10556760.9	TIE ROD LINKAGE ASSEMBLY DRAFT CONTROL	1
6	D10583360.9	KNOB ASSEMBLY LEVER POSITION CONTROL	1
7	D10556710.9	LEVER AND HUB DRAFT CONTROL ASSEMBLY	1

Print Date: 30-Oct-2019

TABLE-14

LEVER PTO GEAR SHIFT SUBASSEMBLY

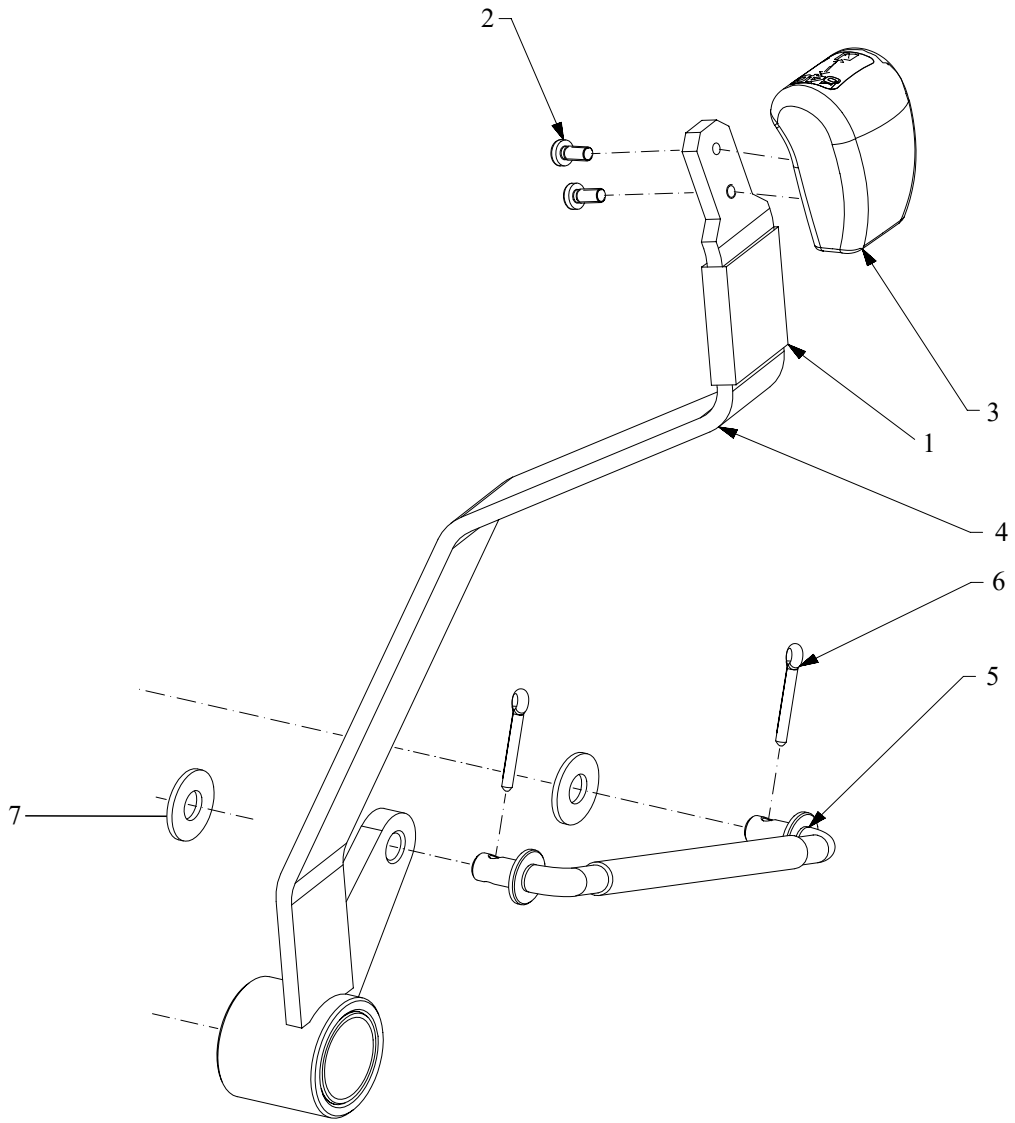

Print Date: 30-Oct-2019

TABLE-14

LEVER PTO GEAR SHIFT SUBASSEMBLY

Fig. No.	Part No.	Description	Qty
1	D10666300.9	SLEEVE LEVER HAND OPERATED (PVC)	1
2	D82501160.9	SCREW M5X0.80X10 CROSS RECESSED PAN HEAD	2
3	D10609260.9	KNOB ASSEMBLY LEVER PTO GEAR SHIFT	1
4	D10614840.9	LEVER AND HUB PTO GEAR SHIFT ASSEMBLY	1
5	D10663640.9	LINKAGE ASSEMBLY ROD PTO GEAR SHIFT	1
6	D88400070.9	PIN 4.0X25.0 COTTER	2
7	D85500690.9	WASHER M10X26 FLAT	2

Print Date: 30-Oct-2019

TABLE-15

JOYSTICK CONTROL SUBASSEMBLY

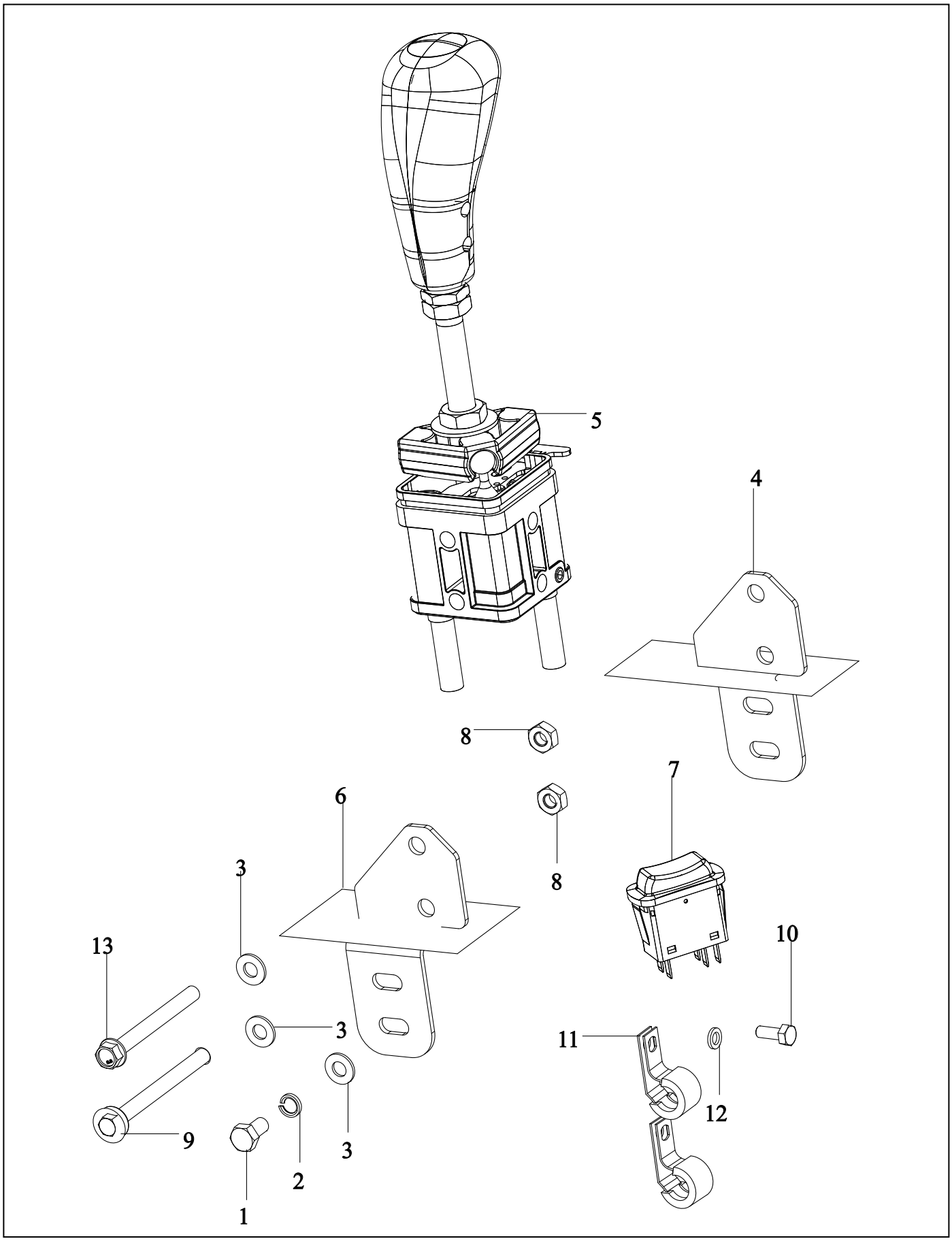

Print Date: 30-Oct-2019

TABLE-15

JOYSTICK CONTROL SUBASSEMBLY

Fig. No.	Part No.	Description	Qty
1	D81503090.9	BOLT M8X1.25X16-8.8 HEX HEAD	4
2	D86500030.9	WASHER M8 SPRING LOCK	6
3	D85500130.9	WASHER M8 FLAT	8
4	D10778110.9	BRACKET JOYSTICK LOADER ACTUATION MOUNTING FRONT	1
5	D10716460.9	JOYSTICK LOADER ACTUATION	1
6	D10778100.9	BRACKET JOYSTICK LOADER ACTUATION MOUNTING REAR	1
7	D10495450.9	SWITCH ASSEMBLY BEACON LAMP	1
8	D83500060.9	NUT M8X1.25-6 HEX	2
9	D81503170.9	BOLT M8X1.25X90-10.9 HEX HEAD FLANGED	1
10	D81500360.9	BOLT M6X1.00X16-9.8 HEX HEAD	2
11	D10544390.9	CLAMP P TYPE (FOR DIA 13.5 TO 15.0)	6
12	D85500110.9	WASHER M6 FLAT	2
13	D81502520.9	BOLT M8X1.25X80-8.8 HEX HEAD FLANGED (WHITE PASSIVATED)	1

Print Date: 30-Oct-2019

TABLE-16

LEVER CONTROL 2WD 4WD SUBASSEMBLY

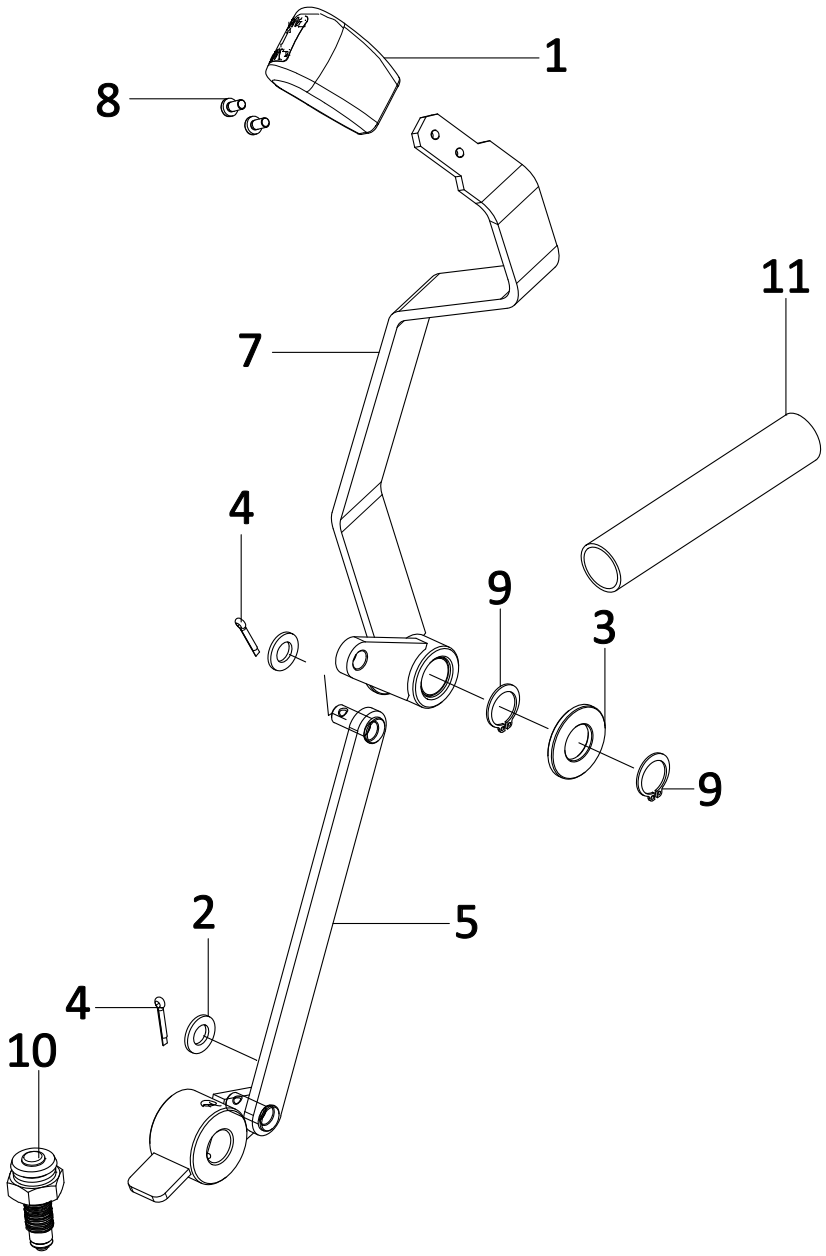

Print Date: 30-Oct-2019

TABLE-16

LEVER CONTROL 2WD 4WD SUBASSEMBLY

Fig. No.	Part No.	Description	Qty
1	D10552710.9	KNOB ASSEMBLY LEVER 2WD 4WD	1
2	D85500140.9	WASHER M10 FLAT	4
3	D85500720.9	WASHER 40X20X3.5 THRUST	2
4	D10013460.9	PIN 1/8"X0.75" COTTER	2
5	D10739060AB.9	LINKAGE ASSEMBLY 2WD 4WD	1
7	D10552610.9	LEVER AND HUB ASSEMBLY 2WD 4WD	1
8	D82501160.9	SCREW M5X0.80X10 CROSS RECESSED PAN HEAD	2
9	D90000620.9	CIRCLIP A20X1.2 N	1
10	D10498400.9	SWITCH ASSEMBLY STOP LAMP	1
11	D10817510.9	SLEEVE LEVER HAND OPERATED (PVC)	1

Print Date: 30-Oct-2019

TABLE-17

LEVER RANGE HIGH LOW MEDIUM GEAR SHIFT SUBASSEMBLY

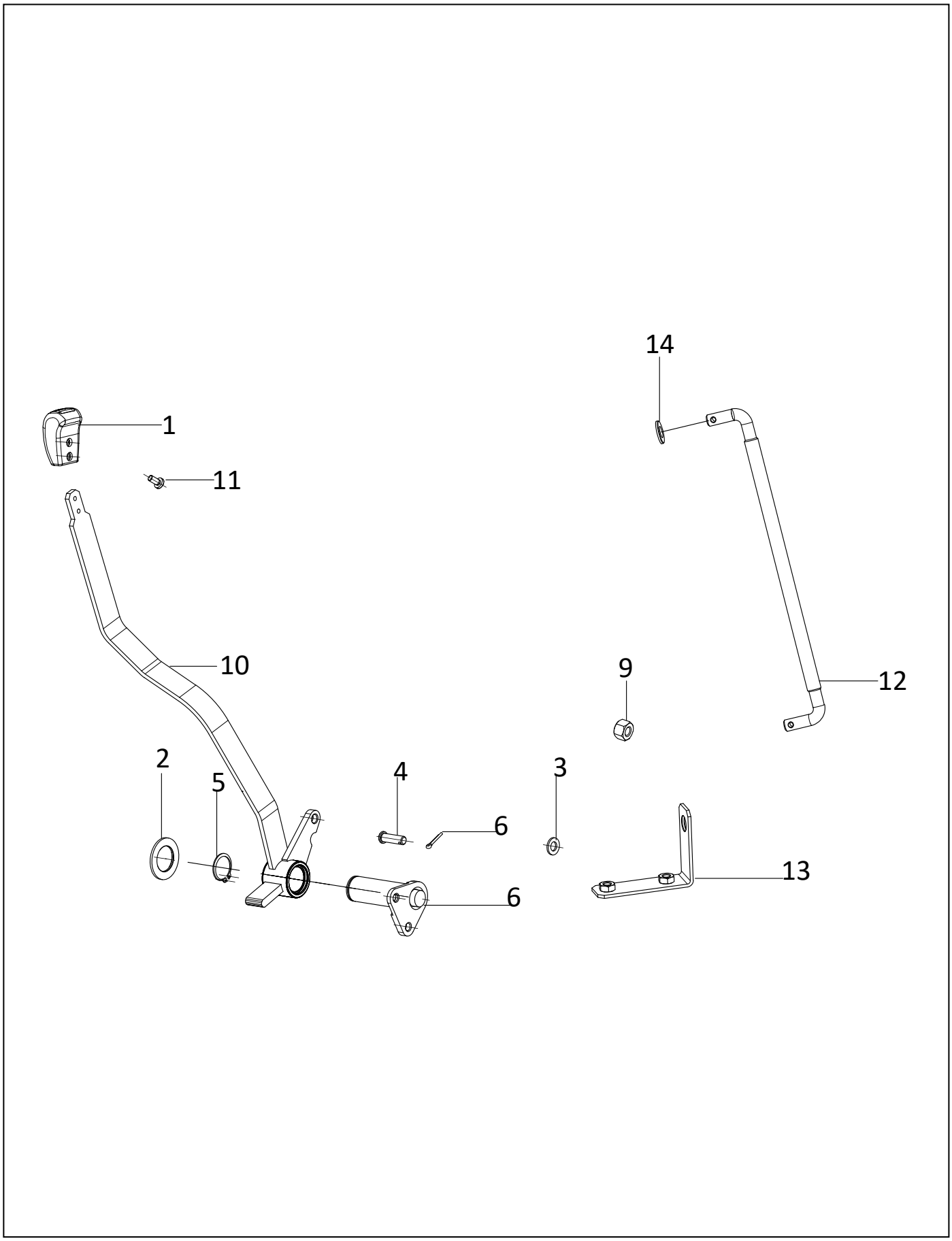

Print Date: 30-Oct-2019

TABLE-17

LEVER RANGE HIGH LOW MEDIUM GEAR SHIFT SUBASSEMBLY

Fig. No.	Part No.	Description	Qty
1	D10583370.9	KNOB ASSEMBLY LEVER RANGE HIGH LOW MEDIUM GEAR SHIFT	1
2	D10014630.9	WASHER NYLON 30.5X50 BRAKE SHAFT THRUST	2
3	D85500140.9	WASHER M10 FLAT	4
4	D10020810.9	PIN 10X31.5 CLEVIS	2
5	D90000080.9	CIRCLIP A30X1.5 N	1
6	D10013460.9	PIN 1/8"X0.75" COTTER	2
9	D83500060.9	NUT M8X1.25-6 HEX	2
10	D10552730.9	LEVER AND HUB RANGE HIGH LOW MEDIUM GEAR SHIFT ASSEMBLY	1
11	D82501370.9	SCREW M5X0.80X10 CROSS RECESSED PAN HEAD (ZINC PLATED)	2
12	D10663660.9	LINKAGE ASSEMBLY ROD RANGE GEAR SHIFT	1
13	D10664480.9	BRACKET ASSEMBLY HOLDING GEAR SHIFT SWITCH	1
14	D85500690.9	WASHER M10X26 FLAT	2

Print Date: 30-Oct-2019

TABLE-18

SHAFT PROPELLER ASSEMBLY (4WD COMPACT HST)

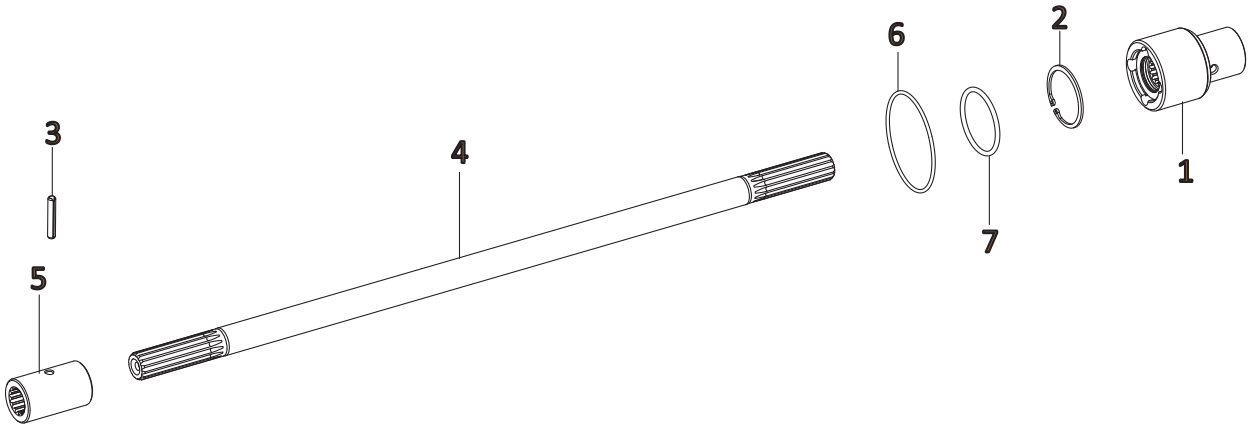

Print Date: 30-Oct-2019

TABLE-18

SHAFT PROPELLER ASSEMBLY (4WD COMPACT HST)

Fig. No.	Part No.	Description	Qty
1	D10554580.9	COUPLING ASSEMBLY PROPELLER SHAFT	1
2	D90500100.9	CIRCLIP B40X1.75 N	1
3	D87500510.9	PIN 6.0X35.0 SPRING DOWEL	2
4	D10599880.9	SHAFT PROPELLER (4WD HST)	1
5	D10548310.9	COUPLING PROPELLER SHAFT (4WD)	1
6	D93601070.9	SEAL O RING 2.62X75.87	1
7	D93601260.9	SEAL O RING 0.139"X1.859"	1

Print Date: 30-Oct-2019

TABLE-19

GUARD ASSEMBLY PROPELLER SHAFT

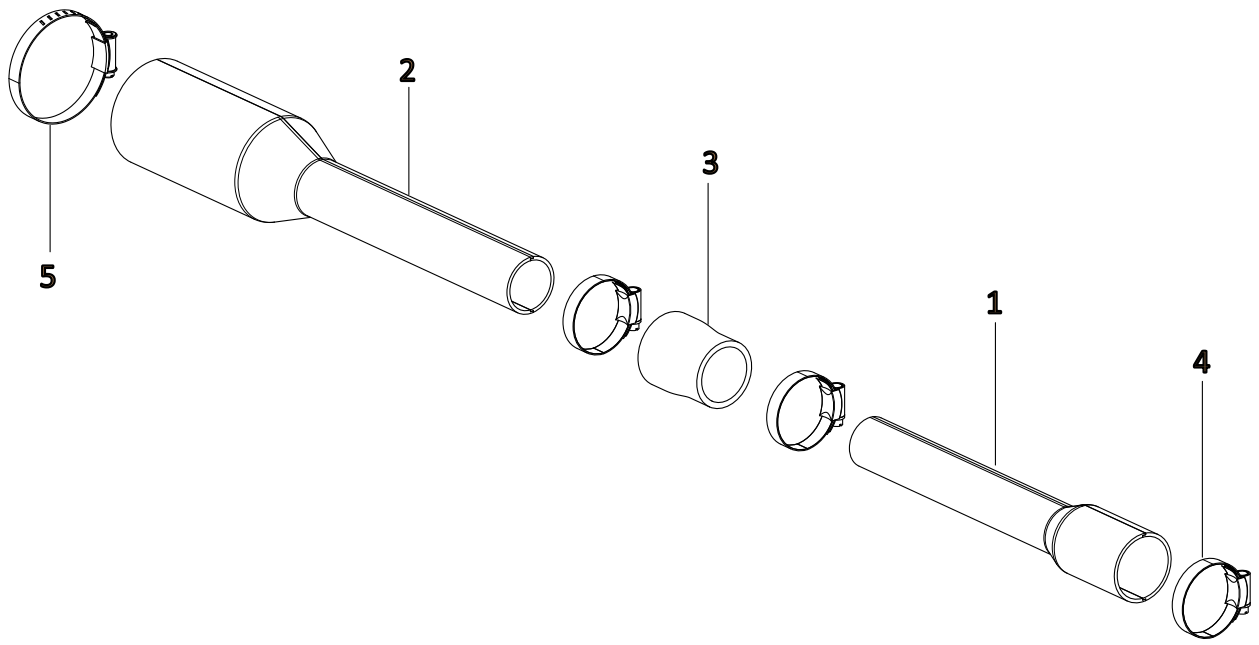

Print Date: 30-Oct-2019

TABLE-19

GUARD ASSEMBLY PROPELLER SHAFT

Fig. No.	Part No.	Description	Qty
1	D10615800.9	GUARD ASSEMBLY PROPELLER SHAFT REAR	1
2	D10561500.9	GUARD ASSEMBLY PROPELLER SHAFT FRONT	1
3	D10656670.9	HOSE GUARD ASSEMBLY PROPELLER SHAFT	1
4	D10017170.9	CLAMP ASSEMBLY 70MM DIAMETER	3
5	D10046730.9	CLAMP ASSEMBLY INTAKE MANIFOLD FT80	1

Print Date: 30-Oct-2019

TABLE-20

HOUSING ASSEMBLY SWIVEL FRONT AXLE RH WITH HARDWARE SUBASSEMBLY (4WD COMPACT)

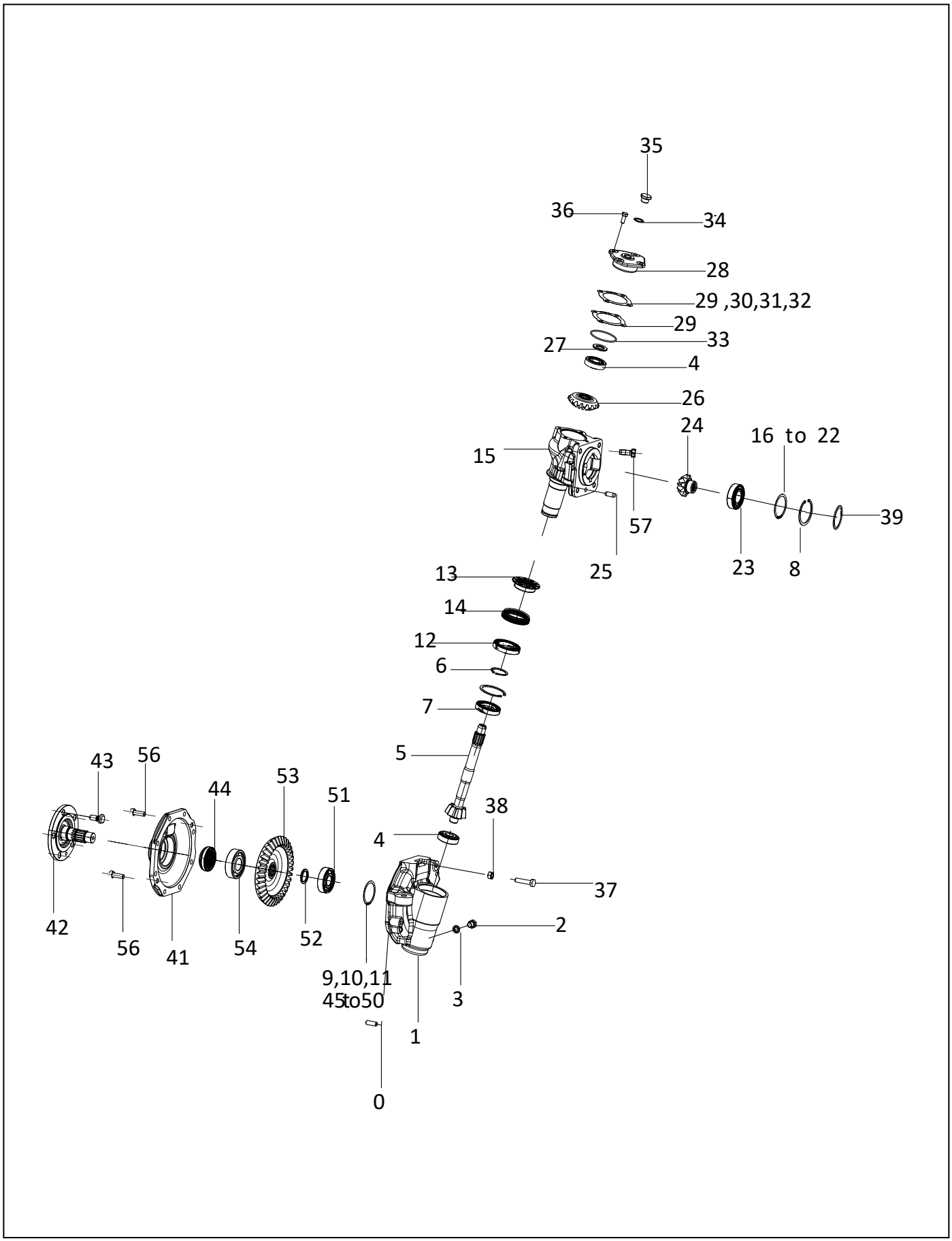

Print Date: 30-Oct-2019

TABLE-20

HOUSING ASSEMBLY SWIVEL FRONT AXLE RH WITH HARDWARE SUBASSEMBLY (4WD COMPACT)

Fig. No.	Part No.	Description	Qty
1	D10528120.9	HOUSING SWIVEL FRONT AXLE RH	1
2	D82501210.9	SCREW M12X1.75X12-8.8 HEX HEAD	1
3	D10161480.9	WASHER 12.0X22.0 SCREW RAIL	1
4	D10533270.9	BEARING TAPER ROLLER 30304	2
5	D10528100.9	SHAFT DRIVER BEVEL GEAR Z-9	1
6	D90000660.9	CIRCLIP A40X2.5 H	1
7	D10538670.9	BEARING BALL 6908	1
8	D90500410.9	CIRCLIP B62X2.0 N (IS 3075 PART-II)	2
9	D10542380.9	SHIM 60X50 (0.075 MM)	1
10	D10542390.9	SHIM 60X50 (0.2285 MM)	1
11	D10542400.9	SHIM 60.X50 (0.4065 MM)	1
12	D10538680.9	BEARING BALL 6909	1
13	D10550290.9	SLEEVE OIL SEAL SWIVEL HOUSING	1
14	D10550300.9	SEAL OIL SWIVEL HOUSING 52X70X10	1
15	D10528130.9	HOUSING KNUCKLE FRONT AXLE	1
16	D10542310.9	SHIM 61.8X51 (0.2285 MM)	1
17	D10542320.9	SHIM 61.8X51 (0.4065 MM)	1
18	D10542330.9	SHIM 61.8X51 (0.5335 MM)	1
19	D10542340.9	SHIM 61.8X51 (0.7875 MM)	1
20	D10542350.9	SHIM 61.8X51 (1 MM)	1
21	D10542360.9	SHIM 61.8X51 (1.2 MM)	1
22	D10542370.9	SHIM 61.8X51 (1.5 MM)	1
23	D10170200.9	BEARING BALL 6206	1
24	D10528150.9	GEAR DRIVER BEVEL KNUCKLE Z-10	1
25	D10159950.9	DOWEL POSITIONING 10X25	3
26	D10528140.9	GEAR DRIVEN BEVEL KNUCKLE Z-16	1
27	D85500450.9	WASHER 36.0X20.0X3.0	1
28	D10542450.9	COVER KNUCKLE HOUSING	1
29	D10544670.9	SHIM COVER KNUCKLE (0.075 MM)	1
30	D10544680.9	SHIM COVER KNUCKLE (0.125 MM)	1
31	D10544690.9	SHIM COVER KNUCKLE (0.2285 MM)	1
32	D10544700.9	SHIM COVER KNUCKLE (0.4065 MM)	1
33	D93601100.9	SEAL O RING 2.62X62.00	1
34	D10005880.9	WASHER M18 FLAT COPPER	1
35	D10006500.9	PLUG M18X1.5X12-6.8 HEX HEAD	1
36	D81500110.9	BOLT M8X1.25X20-8.8 HEX HEAD	4
37	D81503330.9	BOLT M10X1.50X45-8.8 HEX HEAD WITH ROUNDED TOP	1
38	D83500090.9	NUT M10X1.50-8 HEX	1
39	D10547400.9	SEAL O RING 3.53X95.0	1
40	D95000410.9	LOCTITE 574	AR

Print Date: 30-Oct-2019

TABLE-20

HOUSING ASSEMBLY SWIVEL FRONT AXLE RH WITH HARDWARE SUBASSEMBLY (4WD COMPACT)

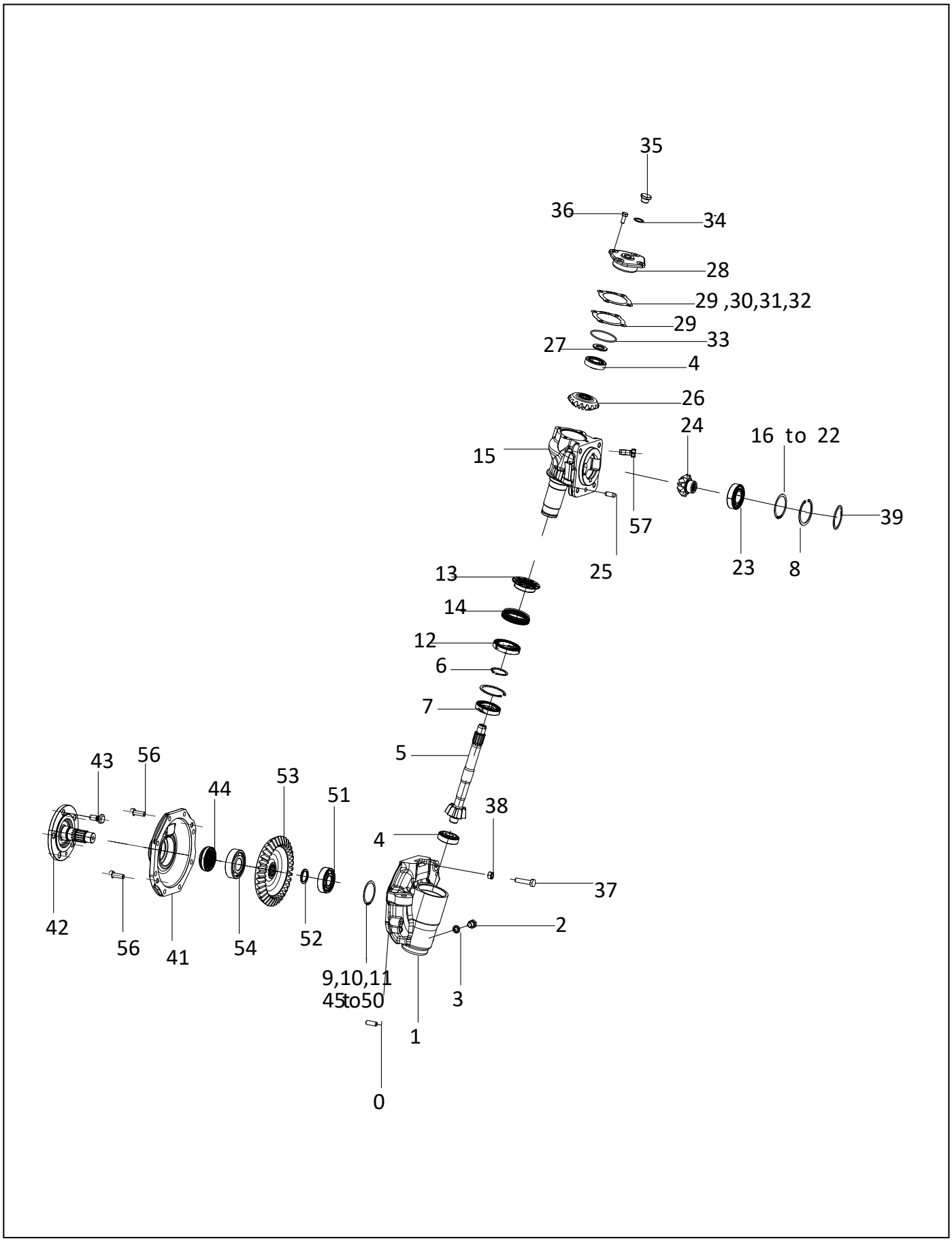

Print Date: 30-Oct-2019

TABLE-20

HOUSING ASSEMBLY SWIVEL FRONT AXLE RH WITH HARDWARE SUBASSEMBLY (4WD COMPACT)

Fig. No.	Part No.	Description	Qty
41	D10528080.9	HOUSING WHEEL FRONT AXLE	1
42	D10528070.9	SHAFT FRONT AXLE WHEEL	1
43	D10541620.9	BOLT M12X1.5 FRONT WHEEL HUB	5
44	D10452820.9	SEAL OIL 35X60X14.5 PTO OUTPUT SHAFT	1
45	D10537800.9	SHIM REAR AXLE SHAFT (0.075 MM)	1
46	D10537810.9	SHIM REAR AXLE SHAFT (0.125 MM)	1
47	D10537820.9	SHIM REAR AXLE SHAFT (0.2285 MM)	1
48	D10537830.9	SHIM REAR AXLE SHAFT (0.4065 MM)	1
49	D10537840.9	SHIM REAR AXLE SHAFT (0.5335 MM)	1
50	D10537850.9	SHIM REAR AXLE SHAFT (0.7875 MM)	1
51	D10533260.9	BEARING BALL 6306	1
52	D10542420.9	WASHER SPLIT WHEEL END	2
53	D10528090.9	GEAR DRIVEN BEVEL WHEEL Z-37	1
54	D10170170.9	BEARING BALL 6305	1
55	D95000410.9	LOCTITE 574	2
56	D81502320.9	BOLT M10X1.50X30-10.9 HEX HEAD	8
57	D82500610.9	SCREW M12X1.75X30-10.9	4

Print Date: 30-Oct-2019

TABLE-21

HOUSING ASSEMBLY SWIVEL FRONT AXLE LH WITH HARDWARE SUBASSEMBLY (4WD COMPACT)

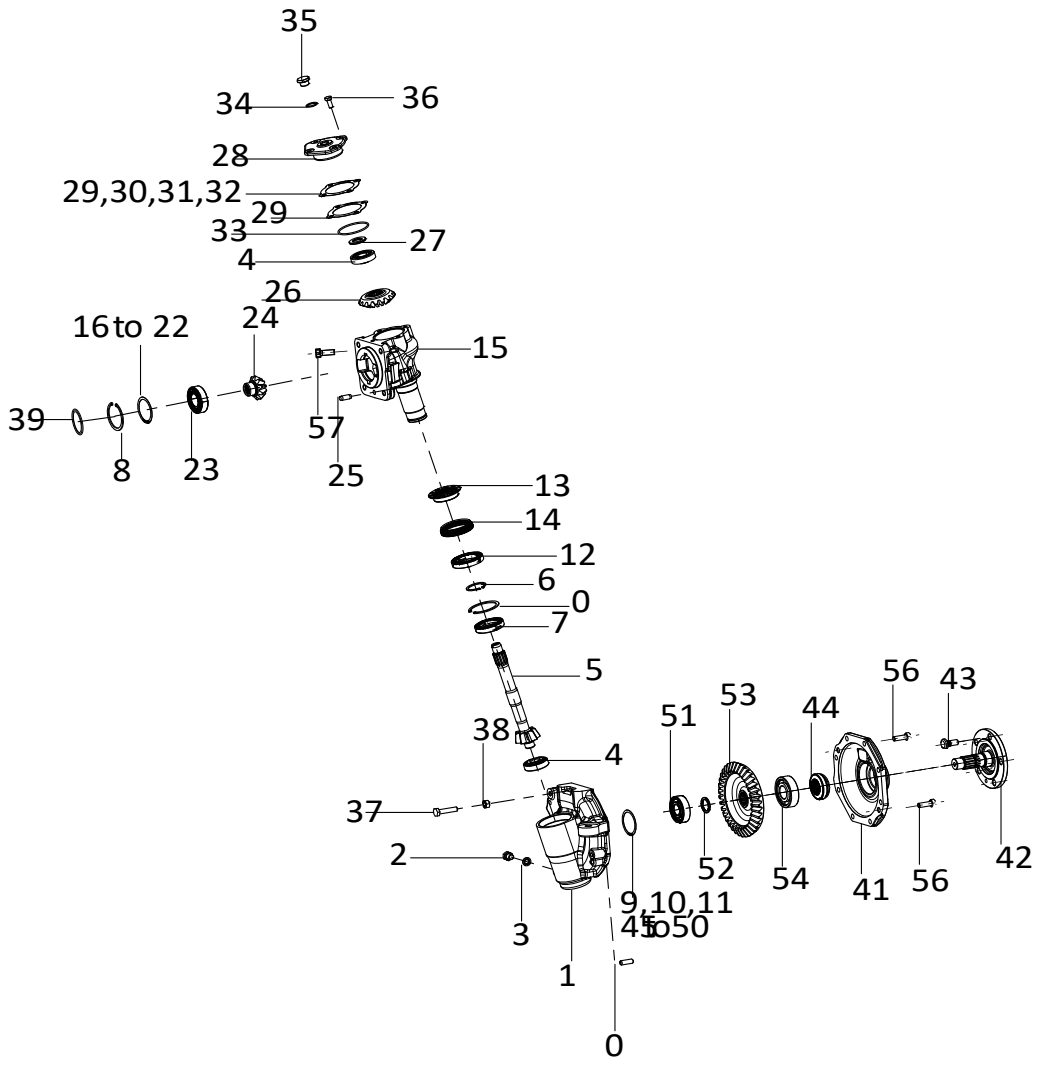

Print Date: 30-Oct-2019

TABLE-21

HOUSING ASSEMBLY SWIVEL FRONT AXLE LH WITH HARDWARE SUBASSEMBLY (4WD COMPACT)

Fig. No.	Part No.	Description	Qty
1	D10528110.9	HOUSING SWIVEL FRONT AXLE LH	1
2	D82501210.9	SCREW M12X1.75X12-8.8 HEX HEAD	1
3	D10161480.9	WASHER 12.0X22.0 SCREW RAIL	1
4	D10533270.9	BEARING TAPER ROLLER 30304	2
5	D10528100.9	SHAFT DRIVER BEVEL GEAR Z-9	1
6	D90000660.9	CIRCLIP A40X2.5 H	1
7	D10538670.9	BEARING BALL 6908	1
8	D90500410.9	CIRCLIP B62X2.0 N (IS 3075 PART-II)	2
9	D10542380.9	SHIM 60X50 (0.075 MM)	1
10	D10542390.9	SHIM 60X50 (0.2285 MM)	1
11	D10542400.9	SHIM 60.X50 (0.4065 MM)	1
12	D10538680.9	BEARING BALL 6909	1
13	D10550290.9	SLEEVE OIL SEAL SWIVEL HOUSING	1
14	D10550300.9	SEAL OIL SWIVEL HOUSING 52X70X10	1
15	D10528130.9	HOUSING KNUCKLE FRONT AXLE	1
16	D10542310.9	SHIM 61.8X51 (0.2285 MM)	1
17	D10542320.9	SHIM 61.8X51 (0.4065 MM)	1
18	D10542330.9	SHIM 61.8X51 (0.5335 MM)	1
19	D10542340.9	SHIM 61.8X51 (0.7875 MM)	1
20	D10542350.9	SHIM 61.8X51 (1 MM)	1
21	D10542360.9	SHIM 61.8X51 (1.2 MM)	1
22	D10542370.9	SHIM 61.8X51 (1.5 MM)	1
23	D10170200.9	BEARING BALL 6206	1
24	D10528150.9	GEAR DRIVER BEVEL KNUCKLE Z-10	1
25	D10159950.9	DOWEL POSITIONING 10X25	3
26	D10528140.9	GEAR DRIVEN BEVEL KNUCKLE Z-16	1
27	D85500450.9	WASHER 36.0X20.0X3.0	1
28	D10542450.9	COVER KNUCKLE HOUSING	1
29	D10544670.9	SHIM COVER KNUCKLE (0.075 MM)	1
30	D10544680.9	SHIM COVER KNUCKLE (0.125 MM)	1
31	D10544690.9	SHIM COVER KNUCKLE (0.2285 MM)	1
32	D10544700.9	SHIM COVER KNUCKLE (0.4065 MM)	1
33	D93601100.9	SEAL O RING 2.62X62.00	1
34	D10005880.9	WASHER M18 FLAT COPPER	1
35	D10006500.9	PLUG M18X1.5X12-6.8 HEX HEAD	1
36	D81500110.9	BOLT M8X1.25X20-8.8 HEX HEAD	4
37	D81503330.9	BOLT M10X1.50X45-8.8 HEX HEAD WITH ROUNDED TOP	1
38	D83500090.9	NUT M10X1.50-8 HEX	1
39	D10547400.9	SEAL O RING 3.53X95.0	1
40	D95000410.9	LOCTITE 574	AR

Print Date: 30-Oct-2019

TABLE-21

HOUSING ASSEMBLY SWIVEL FRONT AXLE LH WITH HARDWARE SUBASSEMBLY (4WD COMPACT)

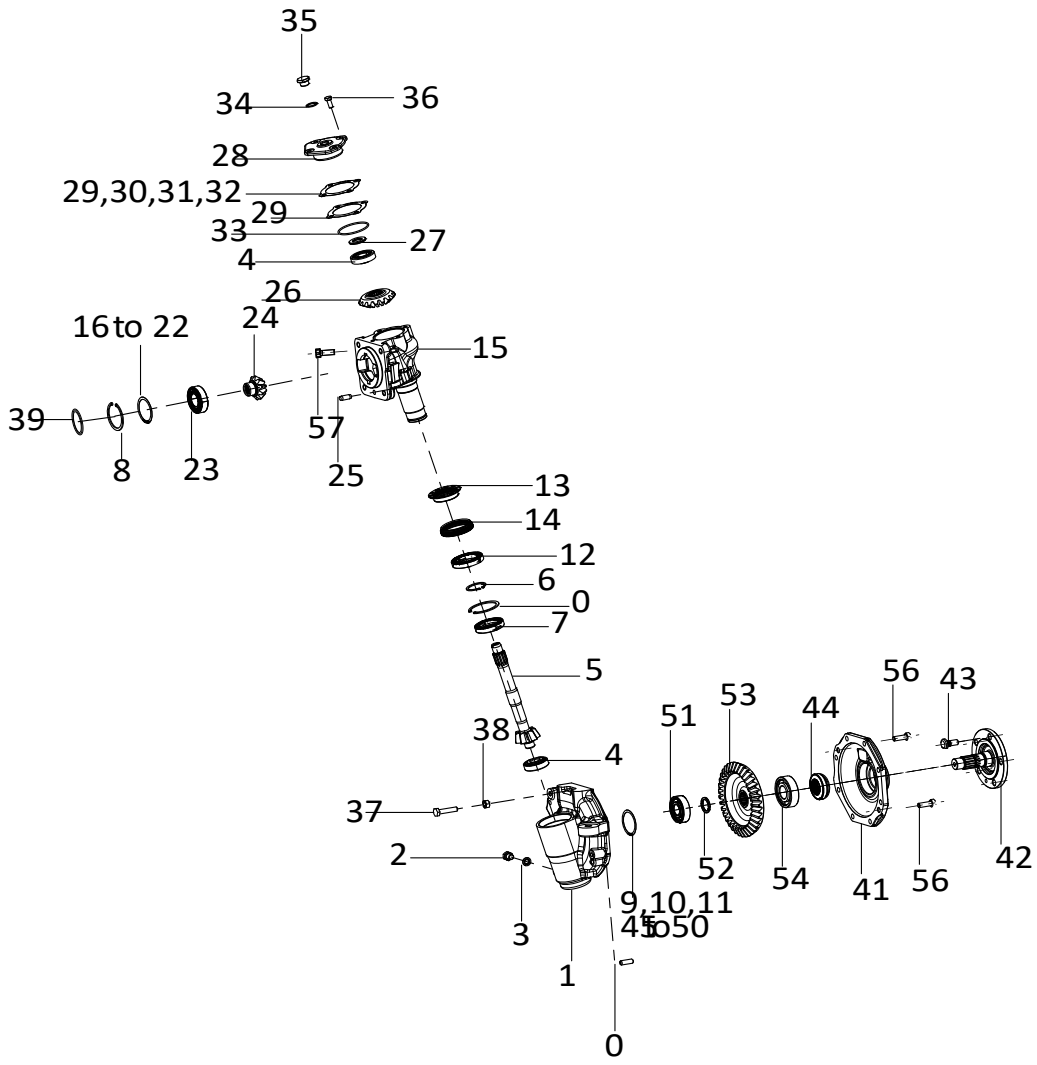

Print Date: 30-Oct-2019

TABLE-21

HOUSING ASSEMBLY SWIVEL FRONT AXLE LH WITH HARDWARE SUBASSEMBLY (4WD COMPACT)

Fig. No.	Part No.	Description	Qty
41	D10528080.9	HOUSING WHEEL FRONT AXLE	1
42	D10528070.9	SHAFT FRONT AXLE WHEEL	1
43	D10541620.9	BOLT M12X1.5 FRONT WHEEL HUB	5
44	D10452820.9	SEAL OIL 35X60X14.5 PTO OUTPUT SHAFT	1
45	D10537800.9	SHIM REAR AXLE SHAFT (0.075 MM)	1
46	D10537810.9	SHIM REAR AXLE SHAFT (0.125 MM)	1
47	D10537820.9	SHIM REAR AXLE SHAFT (0.2285 MM)	1
48	D10537830.9	SHIM REAR AXLE SHAFT (0.4065 MM)	1
49	D10537840.9	SHIM REAR AXLE SHAFT (0.5335 MM)	1
50	D10537850.9	SHIM REAR AXLE SHAFT (0.7875 MM)	1
51	D10533260.9	BEARING BALL 6306	1
52	D10542420.9	WASHER SPLIT WHEEL END	2
53	D10528090.9	GEAR DRIVEN BEVEL WHEEL Z-37	1
54	D10170170.9	BEARING BALL 6305	1
55	D95000410.9	LOCTITE 574	2
56	D81502320.9	BOLT M10X1.50X30-10.9 HEX HEAD	8
57	D82500610.9	SCREW M12X1.75X30-10.9	4

Print Date: 30-Oct-2019

TABLE-22

PILLOW BLOCK SUBASSEMBLY FRONT

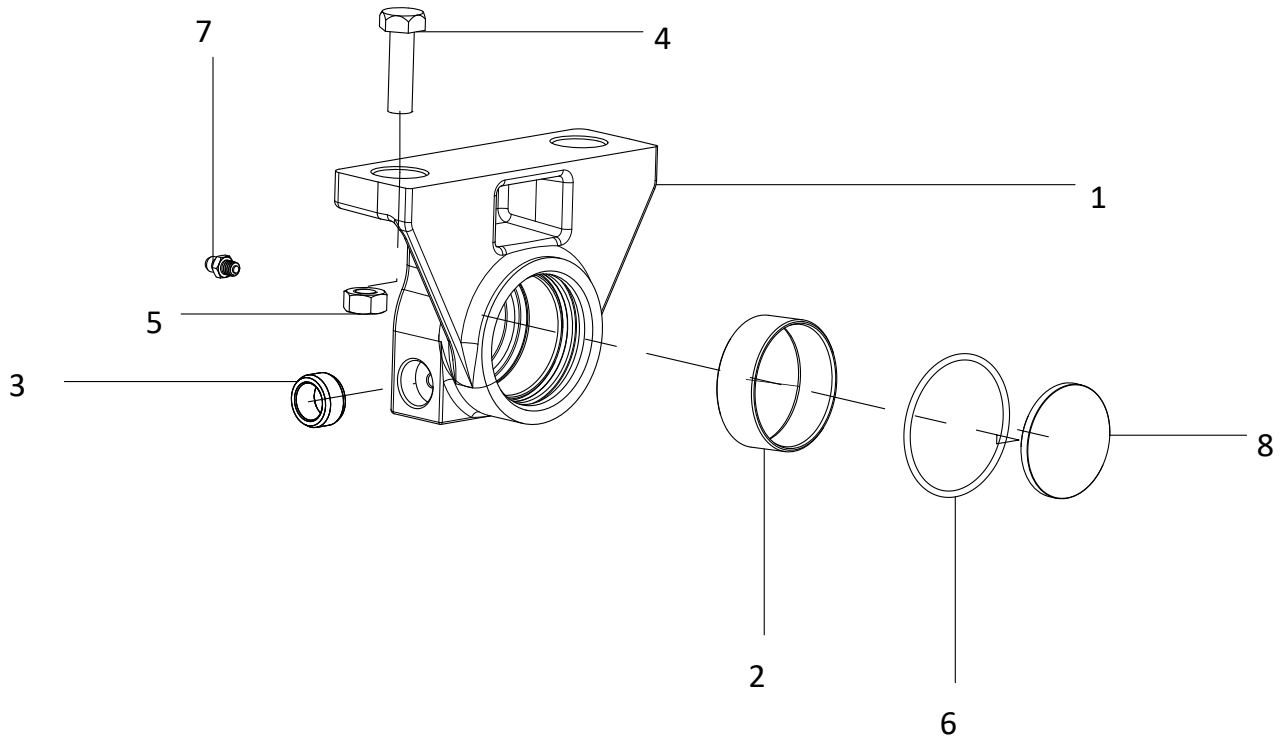

Print Date: 30-Oct-2019

TABLE-22

PILLOW BLOCK SUBASSEMBLY FRONT

Fig. No.	Part No.	Description	Qty
1	D10543050.9	PILLOW BLOCK ASSEMBLY FRONT	1
2	D10542430.9	BUSH PILLOW BLOCK FRONT	1
3	D10548830.9	DOWEL BUSH PILLOW BLOCK	2
4	D83500090.9	NUT M10X1.50-8 HEX	1
5	D81500210.9	BOLT M10X1.50X35-6.6P HEX HEAD	1
6	D10547380.9	SEAL O RING 2.62X55.0	1
7	D92500010.9	GREASE NIPPLE B M6	1
8	D10542460.9	WASHER 48.0X4.0 THRUST	1

Print Date: 30-Oct-2019

TABLE-23

PILLOW BLOCK SUBASSEMBLY REAR

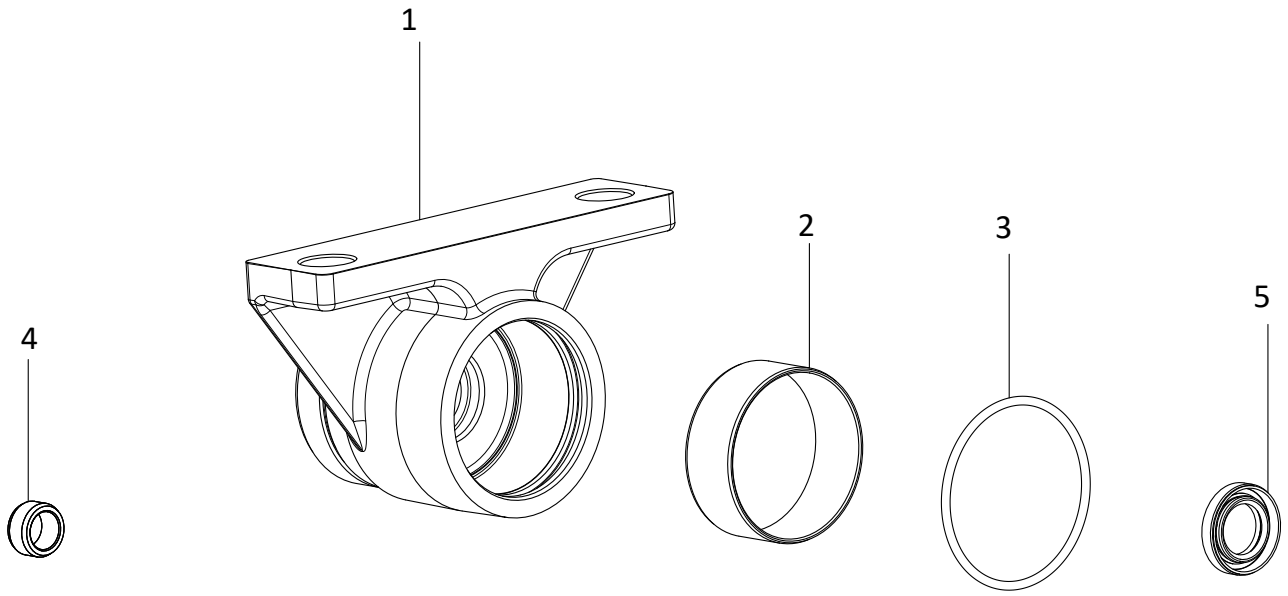

Print Date: 30-Oct-2019

TABLE-23

PILLOW BLOCK SUBASSEMBLY REAR

Fig. No.	Part No.	Description	Qty
1	D10543060.9	PILLOW BLOCK ASSEMBLY REAR	1
2	D10542440.9	BUSH PILLOW BLOCK REAR	1
3	D10547390.9	SEAL O RING 3.53X72.0	1
4	D10548830.9	DOWEL BUSH PILLOW BLOCK	2
5	D93601110.9	SEAL OIL 22X37X7.0	1

Print Date: 30-Oct-2019

TABLE-24

HOUSING ASSEMBLY FRONT AXLE CENTER BEAM SUBASSEMBLY

Print Date: 30-Oct-2019

TABLE-24

HOUSING ASSEMBLY FRONT AXLE CENTER BEAM SUBASSEMBLY

Fig. No.	Part No.	Description	Qty
1	D10528170.9	CASE DIFFERENTIAL FRONT AXLE	1
2	D10520860.9	BEVEL SIDE GEAR DIFFERENTIAL Z-16	2
3	D10520870.9	PINION GEAR DIFFERENTIAL Z-10	2
4	D10541560.9	WASHER THRUST 32X20.5X2 DIFFERENTIAL	2
5	D87500480.9	PIN 5.0X24.0 SPRING DOWEL	2
6	D10528220.9	SHAFT HALF AXLE LH	1
7	D10528230.9	SHAFT HALF AXLE RH	1
8	D10528180.9	GEAR SET BEVEL PINION AND CROWN WHEEL FRONT AXLE (10/21)	1
9	D10541630.9	RING SNAP DIFFERENTIAL FRONT AXLE	1
10	D10602220.9	BEARING BALL 6210 CN	2
11	D10106690.9	CIRCLIP B90X2.80 HB	1
12	D10546960.9	WASHER 89.90X80.0X3.0	1
13	D10546970.9	SHIM 89.90X81.0 (0.125 MM)	1
14	D10546980.9	SHIM 89.90X81.0 (0.2285 MM)	1
15	D10546990.9	SHIM 89.90X81.0 (0.4065 MM)	1
16	D10528210.9	RETAINER PINION FRONT AXLE	1
17	D10533280.9	BEARING TAPER ROLLER 32006X	1
18	D10541570.9	NUT CRIMP M24X1.5 HEX HEAD	1
19	D10154560.9	SEAL O RING 2.65X65.0	1
20	D10014260.9	BEARING TAPER ROLLER 30205	1
21	D10541580.9	SHIM RETAINER PINION (0.075 MM)	1
22	D10541590.9	SHIM RETAINER PINION (0.125 MM)	1
23	D10541600.9	SHIM RETAINER PINION (0.2285 MM)	1
24	D10541610.9	SHIM RETAINER PINION (0.4065 MM)	1
25	D81503270.9	BOLT M10X25X1.5-10.9 ALLEN	4
26	D10528160.9	HOUSING FRONT AXLE CENTER BEAM	1
27	D10673030.9	INDICATOR FRONT AXLE OIL LEVEL	1
28	D10617830.9	WASHER BONDED SEAL M20	1

Print Date: 30-Oct-2019

TABLE-25

AXLE FRONT WITH CYLINDER AND LINK ASSEMBLY

53

Print Date: 30-Oct-2019

TABLE-25

AXLE FRONT WITH CYLINDER AND LINK ASSEMBLY

Fig. No.	Part No.	Description	Qty
1	D10537740.9	CYLINDER ASSEMBLY POWER STEERING	1
1A	D10615010.9	KIT SEAL STEERING CYLINDER (M/S OGNIBENE POWER PART NO 800230090)	1
2	D10537730.9	LINK ASSEMBLY POWER STEERING	2
3	D88400040.9	PIN 3.2X25.0 COTTER	2
4	D81500740.9	BOLT M14X2.00X35-10.9 HEX HEAD LOCK	2
5	D85500520.9	WASHER M14 LOCK (NORD TYPE)	2

Print Date: 30-Oct-2019

TABLE-26

AXLE FRONT SUBASSEMBLY

55

Print Date: 30-Oct-2019

TABLE-26

AXLE FRONT SUBASSEMBLY

Fig. No.	Part No.	Description	Qty
1	D10537650.9	SUPPORT ASSEMBLY FRONT AXLE	1
2	D83500030.9	NUT M16X2.00-8 HEX	6
3	D83500250.9	NUT M12X1.75-10 HEX	6
4	D83500090.9	NUT M10X1.50-8 HEX	1
5	D83500060.9	NUT M8X1.25-6 HEX	2
6	D85500520.9	WASHER M14 LOCK (NORD TYPE)	4
7	D81501630.9	BOLT M14X2.00X40-10.9 HEX HEAD	4
8	D86500020.9	WASHER M12 SPRING LOCK	18
9	D81503200.9	BOLT M12X1.25X30-10.9 HEX HEAD	4
10	D10009920.9	BOLT M12X1.25X36-10.9P HEX HEAD	8
11	D10546540.9	BUSH FRONT BUMPER C TYPE	2
12	D10546520.9	WEIGHT FRONT END	2
13	D10047810.9	BOLT M16X2.0X165-8.8 HEX HEAD	2
14	D10546490.9	BUMPER C TYPE AND PLATE ASSEMBLY FRONT	1
15	D81501910.9	BOLT M12X1.75X30-10.9 HEX HEAD	4
16	D86500060.9	WASHER M16 SPRING LOCK	2
17	D10546550.9	PIN ASSEMBLY TOW HOOK FRONT	1
18	D87500470.9	PIN 5X105 SPRING R TYPE (IS:6483)	1
19	D10546530.9	TOW HOOK FRONT	1
20	D81502100.9	BOLT M16X2.00X45-12.9 HEX HEAD	2
21	D10557740AD.9	PLATE BONNET MOUNTING LH SUPPORT FRONT AXLE	1
22	D86500040.9	WASHER M6 SPRING LOCK	4
23	D82500050.9	SCREW M6X1.00X12-6.8 HEX HEAD	4
24	D10610780AC.9	PLATE BONNET MOUNTING RH SUPPORT FRONT AXLE	1
25	D10565990.9	BRACKET ASSEMBLY FUEL FILTER MOUNTING	1
26	D83501120.9	NUT M12X1.25-10.9 HEX HEAD	2

Print Date: 30-Oct-2019

TABLE-27

COVER ASSEMBLY GUARD STEERING CYLINDER

57

Print Date: 30-Oct-2019

TABLE-27

COVER ASSEMBLY GUARD STEERING CYLINDER

Fig. No.	Part No.	Description	Qty
1	D81500110.9	BOLT M8X1.25X20-8.8 HEX HEAD	4
2	D86500030.9	WASHER M8 SPRING LOCK	4
3	D10537750.9	GUARD STEERING CYLINDER RH	1
4	D10537760.9	GUARD STEERING CYLINDER LH	1

Print Date: 30-Oct-2019

TABLE-28

WHEEL STEERING AND UNIT STEERING SUBASSEMBLY

Print Date: 30-Oct-2019

TABLE-28

WHEEL STEERING AND UNIT STEERING SUBASSEMBLY

Fig. No.	Part No.	Description	Qty
1	D10569180.9	WHEEL ASSEMBLY STEERING	1
2	D81502240.9	BOLT M8X1.25X30-10.9 HEX HEAD FLANGED	1
3	D81500110.9	BOLT M8X1.25X20-8.8 HEX HEAD	4
4	D85500050.9	WASHER M8 FLAT	5
5	D86500030.9	WASHER M8 SPRING LOCK	4
6	D91000280.9	KEY 5.0X6.5 WOODRUFF	1
7	D10564510.9	BRACKET ASSEMBLY STEERING COLUMN MOUNTING	1
8	D83500220.9	NUT M6X1.00-5 HEX	2
9	D10053080.9	NUT M8X1.25-6 HEX	1
10	D10562340.9	GROMMET FUEL TANK	2

Print Date: 30-Oct-2019

TABLE-29

WHEEL AND TYRE ASSEMBLY FRONT 23x8.50-12 (M/s BKT -TURF)

Print Date: 30-Oct-2019

TABLE-29

WHEEL AND TYRE ASSEMBLY FRONT 23x8.50-12 (M/s BKT -TURF)

Fig. No.	Part No.	Description	Qty
1	D83501030.9	NUT M12X1.5-10.9 HEX HEAD	10
2	D86500020.9	WASHER M12 SPRING LOCK	10
3	D10517730.9	TYRE ASSEMBLY FRONT WHEEL 23X8.50-12 12PR TL (LG306)	2
4	D10538490.9	RIM ASSEMBLY FRONT WHEEL 7.00IX12 (ANTIQUE SILVER)	2
5	D10538650.9	VALVE TYRE FRONT WHEEL 23X8.50-12 (TR412,TR413)	2

Print Date: 30-Oct-2019

TABLE-30

TUBING POWER STEERING SUBASSEMBLY

Print Date: 30-Oct-2019

TABLE-30

TUBING POWER STEERING SUBASSEMBLY

Fig. No.	Part No.	Description	Qty
1	D10524330.9	MOTOR ASSEMBLY POWER STEERING	1
2	D10556280.9	HOSE ASSEMBLY POWER STEERING PRESSURE TO MOTOR	1
3	D10556210.9	HOSE ASSEMBLY POWER STEERING RETURN	1
4	D10556290.9	HOSE ASSEMBLY POWER STEERING MOTOR TO CONNECTOR RH	1
5	D10556300.9	HOSE ASSEMBLY POWER STEERING MOTOR TO CONNECTOR LH	1
6	D10617730.9	FLANGE POWER STEERING PRESSURE	1
7	D10556250.9	TUBE ASSEMBLY POWER STEERING PRESSURE	1
8	D10606750.9	TUBE ASSEMBLY POWER STEERING CONNECTOR LH	1
9	D10617700.9	TUBE ASSEMBLY POWER STEERING PRESSURE	1
10	D10606650.9	TUBE ASSEMBLY STEERING RETURN TO OIL COOLER INLET CONNECTOR	1
11	D10606630.9	TUBE ASSEMBLY OIL COOLER INLET CONNECTOR	1
12	D10587720.9	TUBE ASSEMBLY OIL COOLER OUTLET	1
13	D10606610.9	TUBE ASSEMBLY OIL COOLER OUTLET CONNECTOR	1
14	D10606670.9	TUBE ASSEMBLY OIL COOLER OUTLET CONNECTOR TO SOLENOID VALVE	1
15	D10606710.9	TUBE ASSEMBLY SOLENOID VALVE INLET	1
16	D10606730.9	TUBE ASSEMBLY SOLENOID VALVE TO HST INLET	1
17	D10607280.9	TUBE ASSEMBLY HST RETURN	1
18	D10606770.9	TUBE ASSEMBLY POWER STEERING CONNECTOR RH	1
19	D10587690.9	TUBE ASSEMBLY OIL COOLER INLET	1
20	D10606590.9	BRACKET ASSEMBLY OIL COOLER TUBE HOLDING	1
21	D83500070.9	NUT M6X1.00-6 HEX	9
22	D10558120.9	BRACKET ASSEMBLY STEERING PRESSURE TUBE HOLDING LH	1
23	D10607690.9	BRACKET ASSEMBLY STEERING TUBE HOLDING FRONT	1
24	D10607710.9	BRACKET ASSEMBLY STEERING TUBE HOLDING REAR	1
25	D10607760.9	BRACKET ASSEMBLY POWER STEERING TUBE HOLDING	1
26	D10607300.9	CONNECTOR M18X1.5 AND 1/4"-BSP (STUD END)	1
27	D10539480.9	BOLT BANJO M12X1.5	1
28	D10587620.9	CLAMP ASSEMBLY HYDRAULIC PRESSURE	1
29	D10402170.9	CLAMP ASSEMBLY TUBING HYDRAULIC PRESSURE 1	1
30	D10408760.9	CLAMP ASSEMBLY TUBING HYDRAULIC PRESSURE	1
31	D10558140.9	CLAMP ASSEMBLY POWER STEERING	1
32	D93601170.9	SEAL O RING 2.0X19	1
33	D93601350.9	SEAL O RING 1.6X10.5	2
34	D10556190.9	HOSE ASSEMBLY STEERING CYLINDER RH	2
35	D10556240.9	CONNECTOR 9/16-18 AND M14X1.5 STUD END	2
36	D10296350.9	CLAMP ASSEMBLY TUBING HYDRAULIC PRESSURE	2
37	D10519740.9	WASHER BONDED SEAL 12.7X19X1.5	2
38	D10607330.9	CLAMP ASSEMBLY TUBING HYDRAULIC PRESSURE	3
39	D81500340.9	BOLT M6X1.00X35-8.0 HEX HEAD	4
40	D85500050.9	WASHER M8 FLAT	5

Print Date: 30-Oct-2019

TABLE-30

TUBING POWER STEERING SUBASSEMBLY

Print Date: 30-Oct-2019

TABLE-30

TUBING POWER STEERING SUBASSEMBLY

Fig. No.	Part No.	Description	Qty
41	D10174960.9	BOLT BANJO M18X1.50	5
42	D81500110.9	BOLT M8X1.25X20-8.8 HEX HEAD	6
43	D86500030.9	WASHER M8 SPRING LOCK	6
44	D86500040.9	WASHER M6 SPRING LOCK	8
45	D10466130.9	BOLT M6X30-5.8 HEX HEAD (FTES SRUBA M6X30-5.8)	9
46	D10174950.9	SEAL BANJO BOLT DISTRIBUTOR TO CYLINDER TUBE	10
47	D10578080.9	VALVE ASSEMBLY WET CLUTCH ACTUATION	1

Print Date: 30-Oct-2019

TABLE-31

PEDAL SPEED CONTROL AND CRUISE CONTROL SUBASSEMBLY

Print Date: 30-Oct-2019

TABLE-31

PEDAL SPEED CONTROL AND CRUISE CONTROL SUBASSEMBLY

Fig. No.	Part No.	Description	Qty
1	D10747930.9	BRACKET ASSEMBLY HUB SPEED PEDAL CONTROL MOUNTING	1
2	D81501150.9	BOLT M8X1.25X45 HEX HEAD	1
3	D10754220.9	PIN AND BRACKET ASSEMBLY DAMPER MOUNTING SPEED CONTROL	1
4	D10748010.9	HUB AND LEVER ASSEMBLY FORWARD PEDAL CONTROL	1
5	D83500110.9	NUT M8X1.25-8 HEX	2
6	D10747970.9	HUB AND LEVER ASSEMBLY REVERSE PEDAL CONTROL	1
7	D83500110.9	NUT M8X1.25-8 HEX	2
8	D10607850.9	BEARING SPEED CONTROL	1
9	D90000620.9	CIRCLIP A20X1.2 N	1
10	D85500650.9	WASHER 30X20X2.0 THRUST	6
11	D10748970.9	LINK FORWARD PEDAL SPEED CONTROL	1
12	D10748960.9	LINK REVERSE PEDAL SPEED CONTROL	1
13	D10757650.9	PAD FRICTION PEDAL SPEED CONTROL	2
14	D10757590.9	PEDAL ASSEMBLY FORWARD SPEED CONTROL	1
15	D10757620.9	PEDAL ASSEMBLY REVERSE SPEED CONTROL	1
16	D90500350.9	CIRCLIP A10X1.0 N	1
17	D10873230.9	LINK CONNECTING NEUTRAL SETTING ASSEMBLY	1
18	D10748990.9	SHAFT AND LEVER ASSEMBLY CROSS PEDAL SPEED CONTROL	1
19	D10753790.9	PIN AND LEVER ASSEMBLY CROSS SHAFT HST	1
20	D86500030.9	WASHER M8 SPRING LOCK	11
21	D81500110.9	BOLT M8X1.25X20-8.8 HEX HEAD	2
22	D83500160.9	NUT M8X1.25 NYLOCK HEX	2
23	D10607860.9	SPRING RETURN SPEED CONTROL LEVER UPPER	1
24	D81504100.9	BOLT M6X1.0 ALLEN (BLACK COATED)	4
25	D10012250.9	SPRING BRAKE PEDAL RETURN	1
26	D81501470.9	BOLT M8X1.25X25-10.9 HEX HEAD	8
27	D90000100.9	CIRCLIP A18X1.2 N	3
28	D88400200.9	PIN 2.0X12.0 COTTER	5
29	D85500050.9	WASHER M8 FLAT	18
30	D10252930.9	WASHER 18.5X22X3.0 SEAL WIPER RETAINER	2
31	D10013460.9	PIN 1/8"X0.75" COTTER	2
32	D10607950.9	DAMPER ASSEMBLY SPEED CONTROL	1
33	D10873170.9	ARM NEUTRAL HOLD ASSEMBLY	1
34	D10874720.9	HUB AND LEVER ASSEMBLY SPEED CONTROL	1
35	D10873220.9	PIN NEUTRAL ASSEMBLY	1
36	D10873240.9	PLATE AND SPRING TENSION ASSEMBLY NEUTRAL SETTING	2
37	D10874080.9	RUBBER SEALING NEUTRAL HOLD	1
38	D91000020.9	KEY 6 X 9 WOODRUFF	1
39	D83500060.9	NUT M8X1.25-6 HEX	4
40	D81000470.9	BOLT 7/16"-14X1.50" HEX HEAD	1

Print Date: 30-Oct-2019

TABLE-31

PEDAL SPEED CONTROL AND CRUISE CONTROL SUBASSEMBLY

Print Date: 30-Oct-2019

TABLE-31

PEDAL SPEED CONTROL AND CRUISE CONTROL SUBASSEMBLY

Fig. No.	Part No.	Description	Qty
41	D81503440.9	BOLT M8X1.25X40-10.9 HEX HEAD	1

Print Date: 30-Oct-2019

TABLE-32

DRIVE TRAIN INPUT FRONT HOUSING HST ASSEMBLY

Print Date: 30-Oct-2019

TABLE-32

DRIVE TRAIN INPUT FRONT HOUSING HST ASSEMBLY

Fig. No.	Part No.	Description	Qty
1	D10809890.9	SPRING DAMPER INPUT HST	1
2	D10590330.9	COUPLING INPUT HYDROSTATIC TRANSMISSION	1
3	D10580490.9	SHAFT INPUT HYDROSTATIC TRANSMISSION	1

Print Date: 30-Oct-2019

TABLE-33

HOUSING FRONT HST ASSEMBLY

Print Date: 30-Oct-2019

TABLE-33

HOUSING FRONT HST ASSEMBLY

Fig. No.	Part No.	Description	Qty
1	D10599230.9	HOUSING FRONT COMPACT HST	1
2	D10559860.9	WASHER M8 FLAT COPPER (FUEL INJECTION PUMP)	1
3	D10238120.9	PLUG M30X1.5X12 WELCH	2
4	D10616070.9	PLUG M30X1.5 ALLEN	2
5	D93100330.9	PLUG M24X2.0-6G	1
6	D10614170.9	HOSE ASSEMBLY INLET HST	1
7	D10515960.9	CONNECTOR M18X1.50 AND M18X1.50 STUD END	1
8	D10174950.9	SEAL BANJO BOLT DISTRIBUTOR TO CYLINDER TUBE	5
9	D10614200.9	PLATE BLOCK FILTER MOUNTING HST	1
10	D10174960.9	BOLT BANJO M18X1.50	2
11	D81504240.9	BOLT M12X1.75X50-8.8 ALLEN	2
12	D10796180.9	FILTER AND ADAPTOR ASSEMBLY HST OIL INTAKE	1
13	D81503090.9	BOLT M8X1.25X16-8.8 HEX HEAD	1
14	D10616120.9	WASHER BONDED SEAL 27.05X34.93X2.34	1
15	D95013250.9	SEALANT LIQUID ANAEROBIC (HIGHER STRENGTH)	AR
16	D10005120.9	WASHER M24 FLAT COPPER	1

Print Date: 30-Oct-2019

TABLE-34

HST UNIT SUBASSEMBLY WITH HARDWARE

Print Date: 30-Oct-2019

TABLE-34

HST UNIT SUBASSEMBLY WITH HARDWARE

Fig. No.	Part No.	Description	Qty
1	D10616640.9	HYDROSTATIC UNIT ASSEMBLY (NEUTRAL TYPE)	1
2	D81503150.9	BOLT M10X1.50X60-10.9 HEX HEAD	2
3	D81500160.9	BOLT M10X1.50X45-10.9 HEX HEAD	2
4	D84500330.9	STUD B M10X1.5X65-10.9	2
5	D86500090.9	WASHER M10 SPRING LOCK	6
6	D10616120.9	WASHER BONDED SEAL 27.05X34.93X2.34	1
7	D10614190.9	CONNECTOR M18X1.50 AND 3/4"- BSP STUD END	1
8	D83500090.9	NUT M10X1.50-8 HEX	2
9	D95013250.9	SEALANT LIQUID ANAEROBIC (HIGHER STRENGTH)	AR

Print Date: 30-Oct-2019

TABLE-35

DRIVE TRAIN 4WD SUBASSEMBLY (HST)

Print Date: 30-Oct-2019

TABLE-35

DRIVE TRAIN 4WD SUBASSEMBLY (HST)

Fig. No.	Part No.	Description	Qty
1	D10599870.9	SHAFT OUTPUT DROP BOX (HST)	1
2	D90500370.9	CIRCLIP B47X2.0 H	2
3	D93601300.9	SEAL OIL 25X47X10	1
4	D10541470.9	BEARING BALL 6005	1
5	D10548300.9	SPRING COMPRESSION GEAR (4WD)	1
6	D10542300.9	LEVER 4WD ENGAGE	1
7	D10252790.9	PIN PTO SHIFTER FORK	1
8	D10220420.9	SEAL OIL 18X30X7	1
9	D10583080.9	SPACER 20X26X8.0 SHAFT DROP BOX	1
10	D90000480.9	CIRCLIP A25X2.0 H	1
11	D10616670.9	PLATE 4WD COMPACT HST	1
12	D81501420.9	BOLT M8X1.25X15 HEX HEAD	2
13	D10599860.9	RETAINER 4WD SHAFT (HST)	1
14	D10602670.9	BEARING BALL 6005 2RS	1
15	D81502150.9	BOLT M10X1.50X25-10.9 HEX HEAD	2
16	D86500090.9	WASHER M10 SPRING LOCK	2
17	D10542260.9	GEAR OUTPUT 4WD Z-25	1
18	D10006740.9	BALL 5/16" SNAP LOCK	1
19	D95010840.9	LOCTITE ANAEROBIC L-5182	AR
20	D10541500.9	BEARING ROLLER NJ 204	1

Print Date: 30-Oct-2019

TABLE-36

RETAINER AND GEAR PAIR INPUT SUB ASSEMBLY WITH HARDWARE (HST)

79

Print Date: 30-Oct-2019

TABLE-36

RETAINER AND GEAR PAIR INPUT SUB ASSEMBLY WITH HARDWARE (HST)

Fig. No.	Part No.	Description	Qty
1	D10580500.9	CASING INPUT PAIR HYDROSTATIC TRANSMISSION	1
2	D10580510.9	RETAINER INPUT PAIR HYDROSTATIC TRANSMISSION	1
3	D10580520.9	SHAFT DRIVING CONSTANT MESH Z-14	1
4	D10580530.9	GEAR DRIVEN CONSTANT MESH Z-23	1
5	D10580540.9	SHAFT DRIVEN CONSTANT MESH	1
6	D10587490.9	BEARING TAPER ROLLER 30204	1
7	D10587500.9	BEARING TAPER ROLLER TMB32004	2
8	D10539330.9	BEARING TAPPER ROLLER 32005	1
9	D85500580.9	WASHER 40X47X3.0 FLAT	1
10	D85500590.9	WASHER 36X42X3.0 FLAT	1
11	D90000010.9	CIRCLIP A25X1.2 N	1
12	D90500370.9	CIRCLIP B47X2.0 H	1
13	D10596520.9	SHIM 36X42 (THICKNESS 0.075 MM)	1
14	D10596530.9	SHIM 36X42 (THICKNESS 0.125 MM)	1
15	D10596540.9	SHIM 36X42 (THICKNESS 0.2285 MM)	1
16	D10596550.9	SHIM 36X42 (THICKNESS 0.4065 MM)	1
17	D10596560.9	SHIM 36X42 (THICKNESS 0.6 MM)	1
18	D10596570.9	SHIM 36X42 (THICKNESS 0.7875 MM)	1
19	D10596580.9	SHIM 40X47 (THICKNESS 0.075 MM)	1
20	D10596590.9	SHIM 40X47 (THICKNESS 0.125 MM)	1
21	D10596600.9	SHIM 40X47 (THICKNESS 0.2285 MM)	1
22	D10596610.9	SHIM 40X47 (THICKNESS 0.4065 MM)	1
23	D10596620.9	SHIM 40X47 (THICKNESS 0.6 MM)	1
24	D81500110.9	BOLT M8X1.25X20-8.8 HEX HEAD	5
25	D10580480.9	COUPLING OUTPUT HYDROSTATIC TRANSMISSION	1
26	D81503340.9	BOLT M10X1.50X90-10.9 HEX HEAD	1
27	D81503880.9	BOLT M10X1.50X30-10.9 HEX HEAD (16 A/F)	4

Print Date: 30-Oct-2019

TABLE-37

HOUSING ASSEMBLY INTERMEDIATE (HST)

Print Date: 30-Oct-2019

TABLE-37

HOUSING ASSEMBLY INTERMEDIATE (HST)

Fig. No.	Part No.	Description	Qty
1	D10590310.9	HOUSING INTERMEDIATE COMPACT (HST)	1
2	D10481310.9	BUSH BRAKE PEDAL SHAFT	2
3	D87500030.9	PIN 10X22 PLAIN DOWEL	7
4	D93100410.9	PLUG 1/4"-18 SOCKET HEX HEAD (STEEL)	4
5	D10614560.9	INDICATOR OIL LEVEL TRANSMISSION (HST)	1
6	D10005120.9	WASHER M24 FLAT COPPER	1

Print Date: 30-Oct-2019

TABLE-38

CLUTCH WET PTO SUBASSEMBLY

Print Date: 30-Oct-2019

TABLE-38

CLUTCH WET PTO SUBASSEMBLY

Fig. No.	Part No.	Description	Qty
1	D10580880.9	CLUTCH ASSEMBLY WET PTO	1
2	D10580890.9	HUB WET PTO CLUTCH INPUT	1
3	D10580900.9	SHAFT WET PTO CLUTCH OUTPUT	1
4	D93601240.9	SEAL OIL PTFE 16.35X20.25X1.85	2
5	D93601250.9	SEAL OIL PTFE 24.35X28.25X1.85	2
6	D10580910.9	BEARING BALL 6202 C3	1
7	D10541460.9	BEARING BALL 6304	1
8	D90500390.9	CIRCLIP B52X2.0 N	1
9	D10580920.9	RETAINER WET PTO CLUTCH	1
10	D93100060.9	PLUG 1/"8-27 SOCKET HEX HEAD (STEEL)	1
11	D10008050.9	PLUG 8.0MM HYDRAULIC DISTRIBUTOR	1
12	D85500900.9	WASHER 26X8X5 THRUST	1
13	D82500730.9	SCREW M8X1.25X18 ALLEN	1
14	D95000420.9	LOCTITE 262	AR
15	D93601280.9	SEAL O RING 1.0X6.0	1
16	D81503880.9	BOLT M10X1.50X30-10.9 HEX HEAD (16 A/F)	3
17	D81503420.9	BOLT M10X1.50X70-10.9 HEX HEAD	1
18	D10602280.9	BEARING BALL 6007	1
19	D90500410.9	CIRCLIP B62X2.0 N (IS 3075 PART-II)	1
20	D90000020.9	CIRCLIP A35X1.5 N	1

Print Date: 30-Oct-2019

TABLE-39

HOUSING REAR AXLE CENTRE SUBASSEMBLY (HST)

Print Date: 30-Oct-2019

TABLE-39

HOUSING REAR AXLE CENTRE SUBASSEMBLY (HST)

Fig. No.	Part No.	Description	Qty
1	D10594190.9	HOUSING REAR COMPACT MID PTO	1
2	D10213110.9	PLUG DRAIN 3/4-14 NPTF (MAGNETIC)	1
3	D87500030.9	PIN 10X22 PLAIN DOWEL	9
4	D93400460.9	PIN 10X35 PLAIN DOWEL	2
5	D10541130.9	SHIM RETAINER DIFFERENTIAL (0.075 MM)	2
6	D10541140.9	SHIM RETAINER DIFFERENTIAL (0.125 MM)	2
7	D10541150.9	SHIM RETAINER DIFFERENTIAL (0.2285 MM)	2
8	D10541160.9	SHIM RETAINER DIFFERENTIAL (0.4065 MM)	2
9	D10541170.9	SHIM RETAINER DIFFERENTIAL (0.5335 MM)	2
10	D10541180.9	SHIM RETAINER DIFFERENTIAL (0.7875 MM)	2
11	D10537800.9	SHIM REAR AXLE SHAFT (0.075 MM)	2
12	D10537810.9	SHIM REAR AXLE SHAFT (0.125 MM)	2
13	D10537820.9	SHIM REAR AXLE SHAFT (0.2285 MM)	2
14	D10537830.9	SHIM REAR AXLE SHAFT (0.4065 MM)	2
15	D10537840.9	SHIM REAR AXLE SHAFT (0.5335 MM)	2
16	D10537850.9	SHIM REAR AXLE SHAFT (0.7875 MM)	2

Print Date: 30-Oct-2019

TABLE-40

GEAR AND DIFFERENTIAL REAR AXLE SUBASSEMBLY

Print Date: 30-Oct-2019

TABLE-40

GEAR AND DIFFERENTIAL REAR AXLE SUBASSEMBLY

Fig. No.	Part No.	Description	Qty
1	D10541050.9	GEAR SET BEVEL PINION AND CROWN WHEEL REAR AXLE Z-41/11	1
2	D10541060.9	SHAFT BEVEL PINION REAR AXLE DIFFERENTIAL Z-11	1
3	D10541070.9	GEAR DRIVEN REAR AXLE DIFFERENTIAL Z-41	1
4	D10537130.9	CASING DIFFERENTIAL REAR AXLE	1
5	D82501060.9	SCREW M8X1.25X18-10.9 HEX HEAD	10
6	D85500440.9	WASHER 8.1X13X1.0 FLAT	10
7	D10536870.9	WASHER LOCK DIFFERENTIAL CROWN WHEEL GEAR	5
8	D10520880.9	BEVEL SIDE GEAR DIFFERENTIAL Z-13	2
9	D10536860.9	WASHER REAR AXLE DIFFERENTIAL THRUST	2
10	D10520890.9	PINION GEAR DIFFERENTIAL Z-9	2
11	D10536850.9	WASHER REAR AXLE DIFFERENTIAL PINION	2
12	D10536840.9	SPIDER REAR AXLE DIFFERENTIAL	1
13	D87500540.9	PIN 5X40 SPRING DOWEL	1

Print Date: 30-Oct-2019

TABLE-41

DIFFERENTIAL LOCK SUBASSEMBLY

Print Date: 30-Oct-2019

TABLE-41

DIFFERENTIAL LOCK SUBASSEMBLY

Fig. No.	Part No.	Description	Qty
1	D10541080.9	SPRING REAR AXLE DIFFERENTIAL LOCK	1
2	D10541100.9	SHAFT AND LEVER ASSEMBLY REAR AXLE DIFFERENTIAL LOCK	1
3	D10541110.9	FORK DIFFERENTIAL LOCK	1
4	D10007720.9	SEAL O RING 2.00X14.00	2
5	D10546180.9	PIN REAR AXLE DIFFERENTIAL LOCK SHAFT	2
6	D10550590.9	SPACER 18X26X4.0 FLAT	1
7	D10541090.9	SLEEVE REAR AXLE DIFFERENTIAL LOCK	1

Print Date: 30-Oct-2019

TABLE-42

RETAINER BEARING DIFFERENTIAL SUBASSEMBLY LH

Print Date: 30-Oct-2019

TABLE-42

RETAINER BEARING DIFFERENTIAL SUBASSEMBLY LH

Fig. No.	Part No.	Description	Qty
1	D10537770.9	RETAINER BEARING DIFFERENTIAL LH	1
2	D10584630.9	BALL BEARING 6211 CN	1
3	D86500030.9	WASHER M8 SPRING LOCK	6
4	D82500080.9	SCREW M8X1.25X25-8.8 HEX HEAD	6

Print Date: 30-Oct-2019

TABLE-43

RETAINER BEARING DIFFERENTIAL SUBASSEMBLY RH

Print Date: 30-Oct-2019

TABLE-43

RETAINER BEARING DIFFERENTIAL SUBASSEMBLY RH

Fig. No.	Part No.	Description	Qty
1	D10537780.9	RETAINER BEARING DIFFERENTIAL RH	1
2	D10541480.9	BEARING BALL 6011	1
3	D86500030.9	WASHER M8 SPRING LOCK	6
4	D82500080.9	SCREW M8X1.25X25-8.8 HEX HEAD	6

Print Date: 30-Oct-2019

TABLE-44

HOUSING REAR AXLE RH SUBASSEMBLY

Print Date: 30-Oct-2019

TABLE-44

HOUSING REAR AXLE RH SUBASSEMBLY

Fig. No.	Part No.	Description	Qty
1	D10777560.9	HOUSING REAR AXLE RH	1
2	D10507990.9	BRAKE ASSEMBLY REAR WHEEL 4.5" (WET TYPE)	1
3	D10537790.9	HOUSING BRAKE INNER RH	1
4	D81503880.9	BOLT M10X1.50X30-10.9 HEX HEAD (16 A/F)	5
5	D86500090.9	WASHER M10 SPRING LOCK	5
6	D10618950.9	BEARING BALL 6209 CN	1
7	D90500060.9	CIRCLIP B85X2.5 N	1
8	D93601420.9	SEAL OIL 45X70X14.0	1
9	D10006570.9	PLUG DRAIN M14X1.5X10	2
10	D10015190.9	WASHER 14.2X18 FLAT COPPER	2
11	D10580870.9	WASHER LOCK BULL PINION SHAFT BEARING	1
12	D82501060.9	SCREW M8X1.25X18-10.9 HEX HEAD	2
13	D90500470.9	CIRCLIP B70X1.5 N	1
14	D10527500.9	SHAFT AXLE REAR	1
15	D10579620.9	BOLT M16X1.5X48-10.9 REAR WHEEL	5
16	D10536470.9	SHAFT BULL PINION RH (Z-9)	1
17	D10533260.9	BEARING BALL 6306	1
18	D10541090.9	SLEEVE REAR AXLE DIFFERENTIAL LOCK	1
19	D90000560.9	CIRCLIP A30.0X2.0 H	1
20	D10527440.9	SPACER BULL GEAR LOCKING	1
21	D10527450.9	GEAR DRIVEN FINAL DRIVE REDUCTION (Z-53)	1
22	D10527460.9	SPACER AXLE SHAFT INNER	1
23	D10536480.9	NUT CRIMPING M30X1.5	1
24	D10580860.9	PLUG AXLE HOUSING REAR	1
25	D81503420.9	BOLT M10X1.50X70-10.9 HEX HEAD	10
26	D81503890.9	BOLT M10X1.50X143-10.9 HEX HEAD (16 A/F)	1
27	D95013250.9	SEALANT LIQUID ANAEROBIC (HIGHER STRENGTH)	9
28	D95000750.9	LOCTITE L-515	AR
29	D10541090.9	SLEEVE REAR AXLE DIFFERENTIAL LOCK	1

Print Date: 30-Oct-2019

TABLE-45

HOUSING REAR AXLE LH SUBASSEMBLY

Print Date: 30-Oct-2019

TABLE-45

HOUSING REAR AXLE LH SUBASSEMBLY

Fig. No.	Part No.	Description	Qty
1	D10777550.9	HOUSING REAR AXLE LH	1
2	D10507990.9	BRAKE ASSEMBLY REAR WHEEL 4.5" (WET TYPE)	1
3	D10543900.9	HOUSING BRAKE INNER LH	1
4	D81503880.9	BOLT M10X1.50X30-10.9 HEX HEAD (16 A/F)	5
5	D86500090.9	WASHER M10 SPRING LOCK	16
6	D10618950.9	BEARING BALL 6209 CN	1
7	D90500060.9	CIRCLIP B85X2.5 N	1
8	D93601420.9	SEAL OIL 45X70X14.0	1
9	D10006570.9	PLUG DRAIN M14X1.5X10	2
10	D10015190.9	WASHER 14.2X18 FLAT COPPER	2
11	D10580870.9	WASHER LOCK BULL PINION SHAFT BEARING	1
12	D82501060.9	SCREW M8X1.25X18-10.9 HEX HEAD	2
13	D90500470.9	CIRCLIP B70X1.5 N	1
14	D81503890.9	BOLT M10X1.50X143-10.9 HEX HEAD (16 A/F)	1
15	D10527500.9	SHAFT AXLE REAR	1
16	D10579620.9	BOLT M16X1.5X48-10.9 REAR WHEEL	5
17	D81503420.9	BOLT M10X1.50X70-10.9 HEX HEAD	10
18	D10536460.9	SHAFT BULL PINION LH (Z-9)	1
19	D10533260.9	BEARING BALL 6306	1
20	D90000560.9	CIRCLIP A30.0X2.0 H	1
21	D10527440.9	SPACER BULL GEAR LOCKING	1
22	D10527450.9	GEAR DRIVEN FINAL DRIVE REDUCTION (Z-53)	1
23	D10527460.9	SPACER AXLE SHAFT INNER	1
24	D10533260.9	BEARING BALL 6306	1
25	D10536480.9	NUT CRIMPING M30X1.5	1
26	D10580860.9	PLUG AXLE HOUSING REAR	1
27	D95013250.9	SEALANT LIQUID ANAEROBIC (HIGHER STRENGTH)	9
28	D95000750.9	LOCTITE L-515	AR

Print Date: 30-Oct-2019

TABLE-46

PTO REAR SHIFTING ASSEMBLY (HST)

Print Date: 30-Oct-2019

TABLE-46

PTO REAR SHIFTING ASSEMBLY (HST)

Fig. No.	Part No.	Description	Qty
1	D10599710.9	LEVER REAR PTO COMPACT	1
2	D10599700.9	SHAFT REAR PTO LEVER COMPACT	1
3	D87500510.9	PIN 6.0X35.0 SPRING DOWEL	2
4	D10578880.9	FORK REAR PTO SHIFTER	1
5	D10578910.9	RAIL MID PTO SHIFTER	1
6	D10611760.9	SPRING MID PTO LEVER	1
7	D10007720.9	SEAL O RING 2.00X14.00	1
8	D10543890.9	SCREW PTO RAIL LOCK	1
9	D83500090.9	NUT M10X1.50-8 HEX	1
10	D10556870.9	LEVER AND HUB ASSEMBLY GEAR SHIFTING TRANSMISSION (PTO)	1

Print Date: 30-Oct-2019

TABLE-47

PTO MID SHIFTING ASSEMBLY

Print Date: 30-Oct-2019

TABLE-47

PTO MID SHIFTING ASSEMBLY

Fig. No.	Part No.	Description	Qty
1	D10541370.9	LEVER PTO SHIFTING	1
2	D10007720.9	SEAL O RING 2.00X14.00	1
3	D10543890.9	SCREW PTO RAIL LOCK	1
4	D83500090.9	NUT M10X1.50-8 HEX	1
5	D10578910.9	RAIL MID PTO SHIFTER	1
6	D10578890.9	FORK MID PTO SHIFTER	1
7	D82501100.9	SCREW GRUB M10X1.5X10 - 45H	1
8	D10006740.9	BALL 5/16" SNAP LOCK	1
9	D10543910.9	SPRING PTO SHIFTING	1
11	D10602680.9	LEVER AND HUB ASSEMBLY GEAR SHIFTING TRANSMISSION (MID PTO)	1
12	D87500510.9	PIN 6.0X35.0 SPRING DOWEL	1

Print Date: 30-Oct-2019

TABLE-48

RETAINER PTO BEARING AND SEAL ASSEMBLY

Print Date: 30-Oct-2019

TABLE-48

RETAINER PTO BEARING AND SEAL ASSEMBLY

Fig. No.	Part No.	Description	Qty
1	D10541340.9	RETAINER PTO OUTPUT SHAFT	1
2	D10541490.9	BEARING ROLLER NJ 205	1
3	D10002140.9	BEARING BALL PTO SHAFT REAR AXLE	1
4	D10452820.9	SEAL OIL 35X60X14.5 PTO OUTPUT SHAFT	1

Print Date: 30-Oct-2019

TABLE-49

GEAR AND SHAFT PTO SUBASSEMBLY (HST)

Print Date: 30-Oct-2019

TABLE-49

GEAR AND SHAFT PTO SUBASSEMBLY (HST)

Fig. No.	Part No.	Description	Qty
1	D10538850.9	GEAR PTO DRIVEN (Z-51)	1
2	D90000240.9	CIRCLIP B72X2.5 N	2
3	D10001040.9	BEARING BALL PTO COUNTERSHAFT	2
4	D10170170.9	BEARING BALL 6305	2
5	D10578860.9	GEAR MID PTO Z-41	1
6	D90000550.9	CIRCLIP A35.0X2.5 H	1
7	D10578850.9	SHAFT REAR PTO OUTPUT	1
8	D10578830.9	SHAFT INPUT PTO (Z-11)	1
9	D10578870.9	SLEEVE REAR PTO SHIFTER	1
10	D10548300AB.9	SPRING COMPRESSION GEAR (4WD)	1
11	D10006740.9	BALL 5/16" SNAP LOCK	1
12	D10578840.9	GEAR MID PTO DRIVER Z-21	1
13	D10553350.9	SPACER 35X25X3.0	1
14	D10590390.9	SPACER PTO OUTPUT SHAFT (5.1 MM)	2
15	D10590380.9	SPACER PTO OUTPUT SHAFT (5.0 MM)	2
16	D10590360.9	SPACER PTO OUTPUT SHAFT (4.8 MM)	2
17	D10590370.9	SPACER PTO OUTPUT SHAFT (4.9 MM)	2
18	D10590350.9	SPACER PTO OUTPUT SHAFT (4.7 MM)	2

Print Date: 30-Oct-2019

TABLE-50

PTO MID DROP BOX SUBASSEMBLY

107

Print Date: 30-Oct-2019

TABLE-50

PTO MID DROP BOX SUBASSEMBLY

Fig. No.	Part No.	Description	Qty
1	D10594380.9	HOUSING DROP BOX MID PTO	1
2	D10238120.9	PLUG M30X1.5X12 WELCH	1
3	D10598860.9	WASHER SEALING M30	1
4	D10006570.9	PLUG DRAIN M14X1.5X10	1
5	D10015190.9	WASHER 14.2X18 FLAT COPPER	1
6	D93601230.9	SEAL O RING 3.53X104.37	1
7	D10579670.9	SPACER GEAR MID PTO	2
8	D10579680.9	SHAFT GEAR MID PTO	1
9	D10579660.9	CAGE NEEDLE ROLLER BEARING	1
10	D87500170.9	PIN 6.0X18.0 SPRING DOWEL	1
11	D10579650.9	GEAR TRANSMISSION MID PTO (Z-32)	1
12	D10541460.9	BEARING BALL 6304	1
13	D10170170.9	BEARING BALL 6305	1
14	D10312760.9	SEAL OIL DROP BOX OUTPUT SHAFT (COMBINATION TYPE)	1
15	D10579640.9	GEAR MID PTO DRIVEN Z-23	1
16	D10761720.9	SHAFT MID PTO OUTPUT	1
17	D81500280.9	BOLT M10X1.50X25-9.8 HEX HEAD	1
18	D10598870.9	WASHER 11X27X3.0 HST	1
19	D10779660.9	CAP MID PTO SHAFT REAR AXLE	1
20	D10779650.9	RETAINER SEAL MID PTO	1
21	D82500680.9	SCREW M8X1.25X30 ALLEN	4
22	D10547380.9	SEAL O RING 2.62X55.0	1
23	D95000420.9	LOCTITE 262	AR
24	D81501910.9	BOLT M12X1.75X30-10.9 HEX HEAD	4

Print Date: 30-Oct-2019

TABLE-50A

GEARS AND SHAFT PTO SUBASSEMBLY (HST)

Print Date: 30-Oct-2019

TABLE-50A

GEARS AND SHAFT PTO SUBASSEMBLY (HST)

Fig. No.	Part No.	Description	Qty
1	D90500370.9	CIRCLIP B47X2.0 H	1
2	D10541470.9	BEARING BALL 6005	1
3	D10578830.9	SHAFT INPUT PTO (Z-11)	1
4	D10001040.9	BEARING BALL PTO COUNTERSHAFT	2
4A	D10002140.9	BEARING BALL PTO SHAFT REAR AXLE	1
5	D10578870.9	SLEEVE REAR PTO SHIFTER	1
5A	D10553350.9	SPACER 35X25X3.0	1
6	D10578840.9	GEAR MID PTO DRIVER Z-21	1
7	D10541340.9	RETAINER PTO OUTPUT SHAFT	1
8	D10541490.9	BEARING ROLLER NJ 205	1
9	D10590350.9	SPACER PTO OUTPUT SHAFT (4.7 MM)	AR
9A	D10590360.9	SPACER PTO OUTPUT SHAFT (4.8 MM)	AR
9B	D10590370.9	SPACER PTO OUTPUT SHAFT (4.9 MM)	AR
9C	D10590380.9	SPACER PTO OUTPUT SHAFT (5.0 MM)	AR
9D	D10590390.9	SPACER PTO OUTPUT SHAFT (5.1 MM)	AR
10	D10452820.9	SEAL OIL 35X60X14.5 PTO OUTPUT SHAFT	1
11	D10578850.9	SHAFT REAR PTO OUTPUT	1
12	D10549280.9	CAP PTO SHAFT REAR AXLE	1
13	D90000240.9	CIRCLIP B72X2.5 N	2
14	D10538850.9	GEAR PTO DRIVEN (Z-51)	1
15	D10578860.9	GEAR MID PTO Z-41	1
16	D90000550.9	CIRCLIP A35.0X2.5 H	1
17	D10006740.9	BALL 5/16" SNAP LOCK	2
18	D10548300.9	SPRING COMPRESSION GEAR (4WD)	1
19	D10170170.9	BEARING BALL 6305	2
20	D81503870.9	BOLT M10X1.50X35-10.9 HEX HEAD (16 A/F)	4
21	D86500090.9	WASHER M10 SPRING LOCK	4
22	D10602680.9	LEVER AND HUB ASSEMBLY GEAR SHIFTING TRANSMISSION (MID PTO)	1
23	D81503270.9	BOLT M10X25X1.5-10.9 ALLEN	4
24	D81501910.9	BOLT M12X1.75X30-10.9 HEX HEAD	4
25	D10620220.9	PTO MID DROP BOX ASSEMBLY	1
26	D10556870.9	LEVER AND HUB ASSEMBLY GEAR SHIFTING TRANSMISSION (PTO)	1
27	D83500090.9	NUT M10X1.50-8 HEX	2
28	D10543890.9	SCREW PTO RAIL LOCK	2
29	D10578910.9	RAIL MID PTO SHIFTER	2
30	D10541370.9	LEVER PTO SHIFTING	1
31	D82501100.9	SCREW GRUB M10X1.5X10 - 45H	1
32	D10543910.9	SPRING PTO SHIFTING	1
33	D10578890.9	FORK MID PTO SHIFTER	1
34	D10599710.9	LEVER REAR PTO COMPACT	1

Print Date: 30-Oct-2019

TABLE-50A

GEARS AND SHAFT PTO SUBASSEMBLY (HST)

Print Date: 30-Oct-2019

TABLE-50A

GEARS AND SHAFT PTO SUBASSEMBLY (HST)

Fig. No.	Part No.	Description	Qty
35	D10599700.9	SHAFT REAR PTO LEVER COMPACT	1
36	D10683440.9	PIN 6.0X35 SPRING DOWEL COMBINATION TYPE	3
37	D10578880.9	FORK REAR PTO SHIFTER	1
39	D10007720.9	SEAL O RING 2.00X14.00	2

Print Date: 30-Oct-2019

TABLE-51

PLATE INTERMEDIATE TRANSMISSION ASSEMBLY (Z-24)

Print Date: 30-Oct-2019

TABLE-51

PLATE INTERMEDIATE TRANSMISSION ASSEMBLY (Z-24)

Fig. No.	Part No.	Description	Qty
1	D10542270.9	SHAFT IDLER 4WD	1
2	D10542250.9	GEAR IDLER 4WD Z-26	1
3	D10106190.9	BEARING NEEDLE ROLLER (25X33X23.8)	1
4	D90000480.9	CIRCLIP A25X2.0 H	1
5	D86500190.9	WASHER 45X25X1.5	1
6	D10673250.9	WASHER THRUST GEAR 4WD IDLER	1
7	D10565690.9	GEAR DRIVER 4WD Z 24	1
8	D10541490.9	BEARING ROLLER NJ 205	1
9	D10001990.9	BEARING ASSEMBLY TRANSMISSION MAIN SHAFT REAR PILOT	1
10	D10565720.9	PLATE INTERMEDIATE TRANSMISSION Z 24	1
11	D81502150.9	BOLT M10X1.50X25-10.9 HEX HEAD	4
12	D90500390.9	CIRCLIP B52X2.0 N	1

Print Date: 30-Oct-2019

TABLE-52

GEAR DRIVE TRAIN RANGE ASSEMBLY (9+3)

Print Date: 30-Oct-2019

TABLE-52

GEAR DRIVE TRAIN RANGE ASSEMBLY (9+3)

Fig. No.	Part No.	Description	Qty
1	D10534980.9	GEAR DRIVING HIGH RANGE Z-27	1
2	D10534990.9	GEAR DRIVING MEDIUM RANGE Z-23	1
3	D10580560.9	GEAR DRIVEN LOW RANGE Z-32	1
4	D10580550.9	SHAFT RANGE DRIVING Z-18	1
5	D90500140.9	CIRCLIP B55X2 N INTERNAL (IS3075 PART-II)	1
6	D10541450.9	BEARING BALL 6006	1
7	D10541770.9	SPACER RANGE DRIVING LOW GEAR	1
8	D10541760.9	SPACER RANGE DRIVING HIGH GEAR	1
9	D10547280.9	WASHER TAB LOCK	1
10	D83501010.9	NUT M22X1.5 HEX HEAD (THICKNESS 8.0MM)	1
11	D10535000.9	GEAR DRIVEN HIGH-MEDIUM RANGE Z-16/27	1
12	D90000080.9	CIRCLIP A30X1.5 N	1
13	D10541780.9	SPACER TAIL PINION SHAFT	1
14	D10052860.9	BEARING TAPPER ROLLER 30206	1
15	D10562420.9	SPACER GRADED PINION SHAFT (2.5 MM)	AR
16	D10562430.9	SPACER GRADED PINION SHAFT (2.6 MM)	AR
17	D10562440.9	SPACER GRADED PINION SHAFT (2.7 MM)	AR
18	D10562450.9	SPACER GRADED PINION SHAFT (2.8 MM)	AR
19	D10562460.9	SPACER GRADED PINION SHAFT (2.9 MM)	AR
20	D10562470.9	SPACER GRADED PINION SHAFT (3.0 MM)	AR
21	D10562480.9	SPACER GRADED PINION SHAFT (3.1 MM)	AR
22	D10562490.9	SPACER GRADED PINION SHAFT (3.2 MM)	AR
23	D90500320.9	CIRCLIP B62X3.0 H	1
24	D10541500.9	BEARING ROLLER NJ 204	1

Print Date: 30-Oct-2019

TABLE-53

RANGE GEAR SHIFTING ASSEMBLY (COMPACT)

Print Date: 30-Oct-2019

TABLE-53

RANGE GEAR SHIFTING ASSEMBLY (COMPACT)

Fig. No.	Part No.	Description	Qty
1	D87500700.9	PIN 6X30 SPRING DOWEL COMBINATION TYPE	1
2	D10535070.9	RAIL RANGE SHIFTING	1
3	D10535080.9	SHAFT AND LEVER ASSEMBLY RANGE SHIFTING	1
4	D10152510.9	SEAL OIL 20.0X30.0X7.0	1
5	D10535060.9	FORK RANGE SHIFTING	1
6	D10547290.9	SPRING RANGE GEAR SHIFT	1
7	D10006740.9	BALL 5/16" SNAP LOCK	1

Print Date: 30-Oct-2019

TABLE-54

HARDWARE BUCKLE UP TRANSMISSION AND REAR AXLE SUBASSEMBLY

Print Date: 30-Oct-2019

TABLE-54

HARDWARE BUCKLE UP TRANSMISSION AND REAR AXLE SUBASSEMBLY

Fig. No.	Part No.	Description	Qty
1	D81503870.9	BOLT M10X1.50X35-10.9 HEX HEAD (16 A/F)	8
2	D81503420.9	BOLT M10X1.50X70-10.9 HEX HEAD	2
3	D86500090.9	WASHER M10 SPRING LOCK	10
4	D10668700.9	COUPLING PTO INPUT SHAFT	1
5	D10547270.9	COUPLING COUNTERSHAFT SPEED AND RANGE	1
6	D95010840.9	LOCTITE ANAEROBIC L-5182	5

Print Date: 30-Oct-2019

TABLE-55

HARDWARE BUCKLE UP ADAPTOR PLATE AND BACKEND SUBASSEMBLY

Print Date: 30-Oct-2019

TABLE-55

HARDWARE BUCKLE UP ADAPTOR PLATE AND BACKEND SUBASSEMBLY

Fig. No.	Part No.	Description	Qty
1	D81503430.9	BOLT M10X1.50X95-10.9 HEX HEAD	1
2	D81503870.9	BOLT M10X1.50X35-10.9 HEX HEAD (16 A/F)	13
3	D86500090.9	WASHER M10 SPRING LOCK	14
4	D95010830.9	LOCTITE 5060	8

Print Date: 30-Oct-2019

TABLE-55

HARDWARE BUCKLE UP ADAPTOR PLATE & BACKEND SUBASSEMBLY

123

Print Date: 30-Oct-2019

TABLE-55

HARDWARE BUCKLE UP ADAPTOR PLATE & BACKEND SUBASSEMBLY

Fig. No.	Part No.	Description	Qty
1	D86500090.9	WASHER M10 SPRING LOCK	14
2	D81503870.9	BOLT M10X1.50X35-10.9 HEX HEAD (16 A/F)	13
3	D81503430.9	BOLT M10X1.50X95-10.9 HEX HEAD	1
4	D95010830.9	LOCTITE 5060	AR

Print Date: 30-Oct-2019

TABLE-56

TRANSMISSION ASSEMBLY DRESSED UP

Print Date: 30-Oct-2019

TABLE-56

TRANSMISSION ASSEMBLY DRESSED UP

Fig. No.	Part No.	Description	Qty
1	D10609600.9	BRACKET MID PTO GEAR SHIFT SWITCH HOLDING ASSEMBLY	1
2	D10614830.9	BRACKET PTO SWITCH HOLDING	1
3	D10552830.9	BRACKET ASSEMBLY HIGH LOW MEDIUM AND PTO LEVER HOLDING	1
4	D10552770.9	LEVER AND HUB ASSEMBLY GEAR SHIFTING TRANSMISSION (HIGH LOW MEDIUM)	1
5	D10740510.9	LEVER AND HUB ASSEMBLY GEAR SHIFTING TRANSMISSION (2WD 4WD)	1
8	D10604770.9	LEVER ASSEMBLY BRAKE PEDAL REAR LH	1
9	D10604790.9	LEVER ASSEMBLY BRAKE PEDAL REAR RH	1
10	D10552400.9	BLOCK SWIVEL BRAKE PEDAL REAR	4
11	D10552410.9	LEVER BRAKE PEDAL REAR	2
12	D10617950.9	LEVER AND HUB ASSEMBLY GEAR SHIFTING TRANSMISSION (PTO)	1
13	D10602680.9	LEVER AND HUB ASSEMBLY GEAR SHIFTING TRANSMISSION (MID PTO)	1
14	D10182150.9	PLUG M16X1.5X16	1
15	D10716760.9	SWITCH ASSEMBLY (NO TYPE)	2
16	D10013460.9	PIN 1/8"X0.75" COTTER	10
17	D87500330.9	PIN 8X40 SPRING DOWEL COMBINATION TYPE	2
18	D87000160.9	PIN 1/4"X1.50" SPRING DOWEL COMBINATION TYPE	2
19	D10683440.9	PIN 6.0X35 SPRING DOWEL COMBINATION TYPE	1
20	D93400450.9	PIN 10X45 CLEVIS	2
21	D10552680.9	PIN LEVER 2WD 4WD ASSEMBLY	1
22	D81500590.9	BOLT M8X1.25X25-6.6 HEX HEAD	2
23	D82500100.9	SCREW M8X1.25X40-6.6 HEX HEAD	1
24	D82500040.9	SCREW M8X1.25X20-8.8 HEX HEAD	7
25	D85500140.9	WASHER M10 FLAT	10
26	D10009600.9	WASHER 8.5X22 FLAT PHOSPHATED	10
27	D86500030.9	WASHER M8 SPRING LOCK	10

Print Date: 30-Oct-2019

TABLE-57

BRAKE LINKAGE SUB ASSEMBLY (HST)

Print Date: 30-Oct-2019

TABLE-57

BRAKE LINKAGE SUB ASSEMBLY (HST)

Fig. No.	Part No.	Description	Qty
1	D10604710.9	BRAKE PEDAL SHAFT ASSEMBLY INNER	1
2	D10604690.9	SHAFT ASSEMBLY BRAKE PEDAL OUTER	1
3	D10604740.9	HUB AND LEVER ASSEMBLY INDEPENDENT PARKING BRAKE RH	1
4	D10471840.9	SPACER BRAKE ACTUATING SHAFT LH	1
5	D10012260.9	WASHER BRAKE PEDAL CROSS SHAFT THRUST	4
6	D10604800.9	ROD TIE AND CLEVIS ASSEMBLY BRAKE PEDAL	2
7	D83500290.9	NUT M12X1.75 HEX	4
8	D83000010.9	NUT 3/8"-24 HEX	5
9	D90000570.9	CIRCLIP A28X1.5 N	2
10	D10258180.9	PIN 10X35 CLEVIS	4
11	D10552220.9	PAD RUBBER TOP PLATE	2
12	D10552230.9	COVER RUBBER RETURN STOPPER	2
13	D10292730.9	PIN 3/8" CLEVIS	3
14	D10610590.9	ROD TIE AND CLEVIS ASSEMBLY INDEPENDENT PARKING BRAKE	1
15	D10293160.9	CLEVIS 3/8"	3
16	D83500070.9	NUT M6X1.00-6 HEX	3
17	D10558920.9	GUIDE SUPPORT LEVER (IGUS)	1
18	D10604820.9	ROD TIE AND CLEVIS ASSEMBLY PARKING BRAKE	2
19	D10604840.9	BRACKET ASSEMBLY INDEPENDENT PARKING BRAKE MOUNTING	1
20	D10564110.9	KNOB ASSEMBLY INDEPENDENT PARKING BRAKE	1
21	D10012250.9	SPRING BRAKE PEDAL RETURN	2
22	D91000050.9	KEY 4X5 WOODRUFF	1
23	D86500040.9	WASHER M6 SPRING LOCK	1
24	D85500040.9	WASHER M6 FLAT	1
25	D81500340.9	BOLT M6X1.00X35-8.0 HEX HEAD	1
26	D83500090.9	NUT M10X1.50-8 HEX	2
27	D85500140.9	WASHER M10 FLAT	8
28	D10013460.9	PIN 1/8"X0.75" COTTER	4
29	D10768840.9	SWITCH ASSEMBLY NC/NO TYPE	1
30	D85500190.9	WASHER M4.0 FLAT	2
31	D81502010.9	BOLT M4X20-6.8 HEX HEAD	2
32	D81000470.9	BOLT 7/16"-14X1.50" HEX HEAD	1
33	D10605700.9	PEDAL ASSEMBLY BRAKE LH (HST)	1
34	D10605730.9	PEDAL ASSEMBLY BRAKE RH (HST)	1
35	D10498400.9	SWITCH ASSEMBLY STOP LAMP	1

Print Date: 30-Oct-2019

TABLE-58

WHEEL AND TYRE ASSEMBLY REAR 33x15.50-16.50 (M/s BKT -TURF)

Print Date: 30-Oct-2019

TABLE-58

WHEEL AND TYRE ASSEMBLY REAR 33x15.50-16.50 (M/s BKT -TURF)

Fig. No.	Part No.	Description	Qty
1	D83501020.9	NUT M16X1.5-10.9 HEX HEAD	10
2	D86500060.9	WASHER M16 SPRING LOCK	10
3	D10538660.9	VALVE TYRE REAR WHEEL 33X15.50-16.5 (TR415)	2
4	D10517720.9	TYRE ASSEMBLY REAR WHEEL 33X15.50-16.5 10PR TL (LG306)	2
5	D10538500.9	RIM ASSEMBLY REAR WHEEL 12X16.5'' (ANTIQUE SILVER)	2

Print Date: 30-Oct-2019

TABLE-59

HYDRAULIC LIFT ASSEMBLY (COMPACT TRACTOR MODEL)

Print Date: 30-Oct-2019

TABLE-59

HYDRAULIC LIFT ASSEMBLY (COMPACT TRACTOR MODEL)

Fig. No.	Part No.	Description	Qty
1	D10711190.9	HOUSING HYDRAULIC LIFT (M/S MITA PART NO 12.0209.01.2)	1
2	D10711200.9	BUSH SERRATION SHAFT (M/S MITA PART NO 40.0014.00.0)	1
3	D10711210.9	BUSH SERRATION SHAFT (M/S MITA PART NO 40.0018.00.0)	1
5	D10700350.9	SCREW M8X1.25X35-8.8 HEX HEAD (M/S MITA PART NO 300007000)	2
6	D10700160.9	WASHER M8 SPRING LOCK (M/S MITA PART NO 320001000)	2
7	D10705840.9	NUT LOCK PRESELECTOR HYDRAULIC LIFT (M/S MITA PART NO 31.0037.00.0)	1
8	D10705830.9	SEAL O RING 1.78X7.6 (M/S MITA PART NO 36.0045.00.0)	1
9	D10711220.9	PLUG PRESELECTOR HYDRAULIC LIFT (M/S MITA PART NO 44.0281.00.0)	1
10	D10705930.9	KNOB PRESELECTOR HYDRAULIC LIFT (M/S MITA PART NO 43.0028.00.0)	1
11	D10705810.9	VALVE PRESELECTOR HYDRAULIC LIFT (M/S MITA PART NO 12.0003.15.0)	1
12	D10711230.9	SEAL O RING (M/S MITA PART NO 36.0121.00.0)	1
13	D11236250.9	SEAL O RING (M/S MITA PART NO 900530)	1
14	D10705800.9	PLUG M18X1.5 (M/S MITA PART NO 44.0010.00.0)	3
15	D10700730.9	WASHER HYDRAULIC LIFT CONTROL (M/S MITA PART NO 320002000)	3
16	D10711250.9	VALVE CONTROL ASSEMBLY HYDRAULIC LIFT (M/S MITA PART NO 11.0144.00.4)	1
17	D10711750.9	KIT SEAL CONTROL VALVE (M/S MITA PART NO 95.0015.02.4)	1
18	D10512920.9	BREATHER ASSEMBLY HYDRAULIC LIFT OIL	1
19	D10366570.9	WASHER COPPER HYDRAULIC BREATHER	1
20	D83500130.9	NUT M10X1.50-10P HEX	3
21	D84500340.9	STUD B M10X1.5X40-10.9	3
22	D81503340.9	BOLT M10X1.50X90-10.9 HEX HEAD	1
23	D81503300.9	BOLT M10X1.50X28-10.9 HEX HEAD	7

Print Date: 30-Oct-2019

TABLE-60

CYLINDER ASSY

133

Print Date: 30-Oct-2019

TABLE-60

CYLINDER ASSY

Fig. No.	Part No.	Description	Qty
1	D10711260.9	ARM ASSEMBLY HYDRAULIC LIFT (M/S MITA PART NO 13.0048.08.2)	2
2	D10711270.9	CIRCLIP HYDRAULIC LIFT (M/S MITA PART NO 33.0010.00.0)	2
3	D10711280.9	SEAL 35X45X7 SHAFT HYDRAULIC LIFT (M/S MITA PART NO 36.0096.00.0)	2
4	D10711290.9	SHAFT HYDRAULIC LIFT (M/S MITA PART NO 13.0027.06.0)	1
5	D10711300.9	KIT RAM ARM ASSEMBLY HYDRAULIC LIFT (M/S MITA PART NO 13.0021.05.4)	1
5A	D10711310.9	ARM HYDRAULIC LIFT RAM (M/S MITA PART NO 13.0021.05.0)	1
5B	D10711320.9	ROD CONNECTING HYDRAULIC LIFT (M/S MITA PART NO 13.0013.04.0)	1
5C	D10711330.9	SEAL O RING (M/S MITA PART NO 36.0090.00.0)	1
5D	D10711340.9	PIN RAM ARM HYDRAULIC LIFT (M/S MITA PART NO 34.0212.00.0)	1
5E	D10711350.9	SCREW M8X16 (M/S MITA PART NO 30.0036.00.0)	1
5F	D10711360.9	PIN RAM ARM HYDRAULIC LIFT (M/S MITA PART NO 38.0024.00.0)	1
6	D10711370.9	CYLINDER HYDRAULIC LIFT (M/S MITA PART NO 13.0030.01.0)	1
7	D10711380.9	BOLT M12X25 ALLEN HYDRAULIC LIFT (M/S MITA PART NO 30.0154.00.0)	1
8	D11236250.9	SEAL O RING (M/S MITA PART NO 900530)	1
9	D10711390.9	PLUG CYLINDER HYDRAULIC LIFT (M/S MITA PART NO 30.0052.01.0)	1
10	D10705940.9	SEAL O RING 2.4X15.3 (M/S MITA PART NO 36.0103.00.0)	1
11	D10711400.9	KIT PISTON ASSEMBLY HYDRAULIC LIFT (M/S MITA PART NO 13.0019.02.2)	1
11A	D10711410.9	PISTON HYDRAULIC LIFT (M/S MITA PART NO 13.0019.02.0)	1
11B	D10711420.9	RING PISTON HYDRAULIC LIFT (M/S MITA PART NO 36.0115.00.0)	2
11C	D10711430.9	SEAL PISTON HYDRAULIC LIFT (M/S MITA PART NO 36.0114.00.0)	1

Print Date: 30-Oct-2019

TABLE-61

INTERNAL LEVER ASSY

135

Print Date: 30-Oct-2019

TABLE-61

INTERNAL LEVER ASSY

Fig. No.	Part No.	Description	Qty
1	D10711440.9	SUPPORT ASSEMBLY HYDRAULIC LIFT (M/S MITA PART NO 14.0005.14.2)	1
2	D10711450.9	SUPPORT HYDRAULIC LIFT (M/S MITA PART NO 14.0004.14.0)	1
3	D10711460.9	LEVER HYDRAULIC LIFT (M/S MITA PART NO 14.0006.14.2)	1
4	D10711470.9	PIN HYDRAULIC LIFT (M/S MITA PART NO 34.0593.00.0)	1
5	D10711480.9	PIN HYDRAULIC LIFT (M/S MITA PART NO 38.0071.00.0)	1
6	D10711490.9	NUT M8 HYDRAULIC LIFT (M/S MITA PART NO 31.0076.00.0)	1
7	D10711500.9	ROLLER HYDRAULIC LIFT (M/S MITA PART NO 46.0002.00.0)	5
8	D10711510.9	BOLT M6X16 ALLEN HYDRAULIC LIFT (M/S MITA PART NO 30.0003.00.0)	2
9	D10700800.9	CIRCLIP HYDRAULIC LIFT (M/S MITA PART NO 330003000)	5
10	D10711520.9	SEAT SPRING HYDRAULIC LIFT (M/S MITA PART NO 14.0002.21.0)	1
11	D10711530.9	SPRING HYDRAULIC LIFT (M/S MITA PART NO 35.0060.00.0)	1
12	D10711540.9	ROD ASSEMBLY HYDRAULIC LIFT (M/S MITA PART NO 14.0007.22.2)	1
13	D10711550.9	NUT M6 HYDRAULIC LIFT (M/S MITA PART NO 31.0017.00.0)	1
14	D10711560.9	BRACKET HYDRAULIC LIFT (M/S MITA PART NO 14.0005.20.0)	1
15	D10711570.9	ROLLER HYDRAULIC LIFT (M/S MITA PART NO 14.0082.08.0)	1
16	D10711580.9	PIN BRACKET HYDRAULIC LIFT (M/S MITA PART NO 34.0106.00.0)	1
17	D10711590.9	CIRCLIP HYDRAULIC LIFT (M/S MITA PART NO 33.0014.00.0)	1
18	D10711600.9	PIN BRACKET HYDRAULIC LIFT (M/S MITA PART NO 34.0177.00.0)	2
19	D10711610.9	COMPENSATOR HYDRAULIC LIFT (M/S MITA PART NO 14.0024.01.2)	1
20	D10711620.9	LINK HYDRAULIC LIFT (M/S MITA PART NO 14.0013.06.0)	1
21	D10711630.9	WASHER HYDRAULIC LIFT(M/S MITA PART NO 32.0024.00.0)	1
22	D10700570.9	ROLLER HYDRAULIC LIFT (M/S MITA PART NO 140001080)	2
23	D10711640.9	PIN BRACKET HYDRAULIC LIFT (M/S MITA PART NO 34.0161.00.0)	1
24	D10711650.9	WASHER 14.5X20X1.0 HYDRAULIC LIFT (M/S MITA PART NO 32.0011.00.0)	1
25	D10700820.9	CIRCLIP HYDRAULIC LIFT (M/S MITA PART NO 330005000)	1
26	D10711660.9	HUB ASSEMBLY HYDRAULIC LIFT (M/S MITA PART NO 34.0592.00.3)	1
27	D10711670.9	BOLT M8X20 ALLEN HYDRAULIC LIFT (M/S MITA PART NO 30.0064.00.0)	3
28	D10711680.9	LEVER HYDRAULIC LIFT (M/S MITA PART NO 14.0018.10.2)	1
29	D10711690.9	SEAL O RING (M/S MITA PART NO 36.0076.00.0)	1
30	D10711700.9	CIRCLIP HYDRAULIC LIFT (M/S MITA PART NO 33.0011.00.0)	2
31	D10711710.9	LEVER DRAFT HYDRAULIC LIFT (M/S MITA PART NO 14.0038.16.0)	1
32	D10711720.9	LEVER POSITION HYDRAULIC LIFT (M/S MITA PART NO 14.0037.16.0)	1
33	D10711730.9	WASHER COPPER 6.4X10X1.0 HYDRAULIC LIFT (M/S MITA PART NO 32.0268.00.0)	2
34	D10711740.9	RING HYDRAULIC LIFT (M/S MITA PART NO 32.0269.00.0)	1
35	D10706390.9	CIRCLIP HYDRAULIC LIFT (M/S MITA PART NO 33.0012.00.0)	1

Print Date: 30-Oct-2019

TABLE-63

CONTROL LEVERS ASSY

Print Date: 30-Oct-2019

TABLE-63

CONTROL LEVERS ASSY

Fig. No.	Part No.	Description	Qty
1	D10711840.9	SHAFT HYDRAULIC LIFT POSITION CONTROL LEVER (M/S MITA PART NO 16.0075.09.0)	1
2	D10711850.9	SEAL O RING (M/S MITA PART NO 36.0202.00.0)	1
3	D10711860.9	SHAFT HYDRAULIC LIFT DRAFT CONTROL LEVER (M/S MITA PART NO 16.0058.06.2)	1
4	D10711870.9	SEAL O RING (M/S MITA PART NO 36.0035.00.0)	1
5	D10700220.9	PLATE FRICTION HYDRAULIC LIFT CONTROL LEVER (M/S MITA PART NO 160001020)	2
6	D10700210.9	FRICTION DISC HYDRAULIC LIFT CONTROL LEVER (M/S MITA PART NO 160001030)	2
7	D10711880.9	LEVER HYDRAULIC LIFT DRAFT CONTROL (M/S MITA PART NO 16.0180.04.3)	1
8	D10711890.9	FLANGE HYDRAULIC LIFT (M/S MITA PART NO 16.0016.10.3)	1
9	D10711900.9	LEVER HYDRAULIC LIFT POSITION CONTROL (M/S MITA PART NO 16.0118.08.3)	1
10	D10711910.9	QUADRANT HYDRAULIC LIFT (M/S MITA PART NO 16.0073.01.0)	1
11	D10711920.9	BOLT M8X70 HYDRAULIC LIFT (M/S MITA PART NO 30.0267.00.0)	2
12	D10700160.9	WASHER M8 SPRING LOCK (M/S MITA PART NO 320001000)	4
13	D10700170.9	SCREW M6X1.00X40-6.6 HEX HEAD (M/S MITA PART NO 300014000)	2
14	D10700180.9	SPRING HYDRAULIC LIFT CONTROL LEVER PIVOT (M/S MITA PART NO 350008000)	2
15	D10700140.9	SCREW M8X1.25X30-8.8 HEX HEAD (M/S MITA PART NO 300069000)	4
16	D10700500.9	GREASE NIPPLE A M10X1 (M/S MITA PART NO 420002000)	1
17	D10711930.9	SEAL O RING QUADRANT (M/S MITA PART NO 36.0203.00.0)	1
18	D10711630.9	WASHER HYDRAULIC LIFT(M/S MITA PART NO 32.0024.00.0)	1
19	D10700800.9	CIRCLIP HYDRAULIC LIFT (M/S MITA PART NO 330003000)	2
20	D10711700.9	CIRCLIP HYDRAULIC LIFT (M/S MITA PART NO 33.0011.00.0)	1
21	D10711940.9	WASHER HYDRAULIC LIFT (M/S MITA PART NO 32.0267.00.0)	1

Print Date: 30-Oct-2019

TABLE-64

PUMP HYDRAULIC LIFT ASSEMBLY

Print Date: 30-Oct-2019

TABLE-64

PUMP HYDRAULIC LIFT ASSEMBLY

Fig. No.	Part No.	Description	Qty
1	D10525430.9	PUMP ASSEMBLY HYDRAULIC LIFT OIL (6 CC)	1
2	D10525420.9	PUMP ASSEMBLY HYDRAULIC LIFT OIL (8 CC)	1
3	D10529630.9	BELT FAN DRIVE (960)	1

Print Date: 30-Oct-2019

TABLE-65

TUBING HYDRAULIC SUCTION SUBASSEMBLY

Print Date: 30-Oct-2019

TABLE-65

TUBING HYDRAULIC SUCTION SUBASSEMBLY

Fig. No.	Part No.	Description	Qty
1	D10606020.9	TUBE AND STRAINER ASSEMBLY HYDRAULIC SUCTION	1
2	D10606010.9	HOSE HYDRAULIC SUCTION TUBE TO STRAINER	1
3	D10528850.9	STRAINER ASSEMBLY HYDRAULIC OIL 102 LPM	1
4	D10603860.9	STRAINER HYDRAULIC SUCTION (MAGNETIC)	1
5	D10603870.9	CLIP WIRE STRAINER	1
6	D10557960.9	BRACKET ASSEMBLY HYDRAULIC STRAINER MOUNTING	1
7	D10527110.9	CLAMP SUCTION STRAINER HOLDING	2
8	D83500070.9	NUT M6X1.00-6 HEX	1
9	D10603190.9	HOSE HYDRAULIC SUCTION STRAINER TO TUBE	1
10	D10558000.9	TUBE ASSEMBLY HYDRAULIC SUCTION STRAINER TO PUMP	1
11	D10558040.9	HOSE STEERING SUCTION	1
12	D10558050.9	TUBE ASSEMBLY STEERING SUCTION HOSE TO PUMP	1
13	D10606040.9	BRACKET ASSEMBLY SUCTION TUBE HOLDING	1
14	D10606030.9	CLAMP HYDRAULIC SUCTION TUBING	1
15	D85500110.9	WASHER M6 FLAT	1
16	D81500360.9	BOLT M6X1.00X16-9.8 HEX HEAD	1
17	D10016350.9	SEAL O RING 2.65X25.00	1
18	D93601170.9	SEAL O RING 2.0X19	2
19	D83500060.9	NUT M8X1.25-6 HEX	2
20	D10330480.9	CLAMP HOSE WORM DRIVE 60MM	2
21	D10013970.9	CLAMP HOSE 35A	4
22	D81500110.9	BOLT M8X1.25X20-8.8 HEX HEAD	4
23	D81501760.9	BOLT M6X1.00X45-10.9 HEX HEAD	4
24	D81500270.9	BOLT M6X1.00X25-9.8 HEX HEAD	4
25	D86500030.9	WASHER M8 SPRING LOCK	4
26	D85500050.9	WASHER M8 FLAT	4
27	D86500040.9	WASHER M6 SPRING LOCK	8

Print Date: 30-Oct-2019

TABLE-66

TUBING AUXILLARY VALVE SUBASSEMBLY

Print Date: 30-Oct-2019

TABLE-66

TUBING AUXILLARY VALVE SUBASSEMBLY

Fig. No.	Part No.	Description	Qty
1	D10607360.9	TUBE ASSEMBLY HYDRAULIC PRESSURE TANDEM PUMP TO CONNECTOR	1
2	D10607340.9	TUBE ASSEMBLY HYDRAULIC PRESSURE CONNECTOR FRONT	1
3	D10869930.9	TUBE ASSEMBLY HYDRAULIC PRESSURE CONNECTOR	1
4	D10869910.9	TUBE ASSEMBLY SPOOL VALVE TO HYDRAULIC LIFT	1
5	D10565330.9	HOSE ASSEMBLY HYDRAULIC PRESSURE CONNECTOR TO SPOOL VALVE INLET	1
6	D10565340.9	HOSE ASSEMBLY SPOOL VALVE TO HYDRAULIC LIFT	1
7	D10609280.9	BRACKET ASSEMBLY HYDRAULIC TUBE HOLDING	1
8	D83500070.9	NUT M6X1.00-6 HEX	1
9	D10408760.9	CLAMP ASSEMBLY TUBING HYDRAULIC PRESSURE	1
10	D10413940.9	GROMMET TUBE RETURN STEERING MOTOR TO RESERVOIR	1
11	D10548020.9	CLAMP TUBE HOLDING DIA 12	1
12	D10193330.9	COUPLING ASSEMBLY VALVE HYDRAULIC REMOTE (POPPET TYPE)	1
13	D10193340.9	COUPLING ASSEMBLY VALVE HYDRAULIC REMOTE (POPPET TYPE)	1
14	D10402170.9	CLAMP ASSEMBLY TUBING HYDRAULIC PRESSURE 1	1
15	D10466130.9	BOLT M6X30-5.8 HEX HEAD (FTES SRUBA M6X30-5.8)	1
16	D10587620.9	CLAMP ASSEMBLY HYDRAULIC PRESSURE	1
17	D10587630.9	BRACKET ASSEMBLY HYDRAULIC PRESSURE TUBE HOLDING	1
18	D83500070.9	NUT M6X1.00-6 HEX	1
19	D85500050.9	WASHER M8 FLAT	1
20	D81500110.9	BOLT M8X1.25X20-8.8 HEX HEAD	1
21	D85500110.9	WASHER M6 FLAT	1
22	D81500360.9	BOLT M6X1.00X16-9.8 HEX HEAD	1
23	D86500050.9	WASHER M10 SPRING LOCK	1
24	D81500200.9	BOLT M10X1.50X20-6.6 HEX HEAD	1
25	D93601170.9	SEAL O RING 2.0X19	1
26	D10514960.9	ADAPTOR 3/4"-16 UNF AND M18X1.50 (S TYPE)	2
27	D10174960.9	BOLT BANJO M18X1.50	3
28	D86500040.9	WASHER M6 SPRING LOCK	4
29	D81500270.9	BOLT M6X1.00X25-9.8 HEX HEAD	4
30	D10174950.9	SEAL BANJO BOLT DISTRIBUTOR TO CYLINDER TUBE	6

Print Date: 30-Oct-2019

TABLE-67

LINKAGE THREE POINT COMPACT TRACTOR SUBASSEMBLY

Print Date: 30-Oct-2019

TABLE-67

LINKAGE THREE POINT COMPACT TRACTOR SUBASSEMBLY

Fig. No.	Part No.	Description	Qty
1	D10549080.9	PIN UPPER HYDRAULIC LIFT LEVELING	2
2	D10549090.9	PIN LOWER HYDRAULIC LIFT LEVELING	2
3	D85500020.9	WASHER M16 FLAT	2
4	D10549100.9	LINK ASSEMBLY HYDRAULIC LOWER LINK	2
5	D83500980.9	NUT M16X2.0X8.8 HEX NYLOCK	2
6	D87500530.9	PIN 4.0X75 SPRING R TYPE DOUBLE COIL (IS:6483)	6
7	D10551090.9	LINK ASSEMBLY HYDRAULIC LIFT UPPER	1
8	D92500010.9	GREASE NIPPLE B M6	3
9	D10773380.9	PIN ASSEMBLY LOWER LINK MOUNTING	2
10	D10551310.9	WASHER M23X12.5 LOWER LINK MOUNTING	2
11	D86500050.9	WASHER M10 SPRING LOCK	4
12	D81502320.9	BOLT M10X1.50X30-10.9 HEX HEAD	4
13	D85500470.9	WASHER M20X30X5.0 FLAT	2
14	D10554400.9	PIN HYDRAULIC LIFT UPPER	1
15	D10674130.9	PIN HYDRAULIC LIFT UPPER	1
16	D10773400.9	PIN LOWER LINK MOUNTING	2
17	D10212630.9	PIN LYNCH LOCKING ASSEMBLY	2
18	D10551300.9	WASHER M30X4.5 LOWER LINK MOUNTING	2
19	D10551180.9	STAY BAR ASSEMBLY (RECTANGLE TYPE)	2
20	D10710000.9	BOLT EYE STAY BAR	2
21	D10551210.9	BRACKET PIVOT STAY BAR RECTANGLE TYPE	2
22	D10551190.9	CHANNEL OUTER HOLLOW STAY BAR RECTANGLE TYPE	2
23	D10551200.9	CHANNEL INNER SOLID STAY BAR RECTANGLE TYPE	2
24	D10551220.9	PIN PIVOT STAY BAR	2
25	D88400220.9	PIN 2.5X25.0 COTTER (ZINC PLATED)	2
26	D88400090.9	PIN 4.0X40.0 COTTER	2
27	D87500500.9	PIN 2X51 SPRING R TYPE (IS:6483)	2
28	D10553020.9	PIN U BOLT STAY BAR	2
29	D10551240.9	PIN AND RING ASSEMBLY STAY BAR	2
30	D85500870.9	WASHER M10 FLAT DIA 18	2
31	D10549000.9	ROD ASSEMBLY HYDRAULIC LIFT LEVELING	2

Print Date: 30-Oct-2019

TABLE-68

HITCH REAR SWINGING DRAWBAR SUBASSEMBLY

Print Date: 30-Oct-2019

TABLE-68

HITCH REAR SWINGING DRAWBAR SUBASSEMBLY

Fig. No.	Part No.	Description	Qty
1	D82500600.9	BOLT M5X0.80X25-8.8 HEX HEAD	6
2	D83500010.9	NUT M5X0.8-6 PLATED	2
3	D81503350.9	BOLT M12X1.75X40-10.9 ALLEN	8
4	D86500020.9	WASHER M12 SPRING LOCK	14
5	D10550270.9	PIN LOADING SWINGING DRAWBAR MOUNTING	1
6	D10550280.9	PIN GUIDING SWINGING DRAWBAR MOUNTING	1
7	D87500530.9	PIN 4.0X75 SPRING R TYPE DOUBLE COIL (IS:6483)	1
8	D87500500.9	PIN 2X51 SPRING R TYPE (IS:6483)	1
9	D10007150.9	BOLT M12X1.75X45-10.9 HEX HEAD	6
10	D83500760.9	NUT M12X1.75-6 HEX (GRADE 10.9)	6
11	D10549940.9	GUARD PTO ASSEMBLY	1
12	D83500010.9	NUT M5X0.8-6 PLATED	4
13	D10550010.9	BRACKET ASSEMBLY TOW HOOK MOUNTING RH	1
14	D10550000.9	BRACKET ASSEMBLY TOW HOOK MOUNTING LH	1
15	D10550150.9	SWINGING DRAWBAR ASSEMBLY	1
16	D81500700.9	BOLT M12X1.75X60	2
17	D83500290.9	NUT M12X1.75 HEX	2
18	D86500020.9	WASHER M12 SPRING LOCK	2
19	D85500140.9	WASHER M10 FLAT	1
20	D87500530.9	PIN 4.0X75 SPRING R TYPE DOUBLE COIL (IS:6483)	1
21	D10550220.9	BRACKET SWINGING DRAWBAR MOUNTING ASSEMBLY	1

Print Date: 30-Oct-2019

TABLE-69

HARNESS SUBASSEMBLY

Print Date: 30-Oct-2019

TABLE-69

HARNESS SUBASSEMBLY

Fig. No.	Part No.	Description	Qty
1	D10609170.9	HARNESS ASSEMBLY INSTRUMENT PANEL TO RUNNING BOARD	1
2	D10566850.9	HARNESS ASSEMBLY MAIN	1
3	D10612710.9	HARNESS ASSEMBLY INSTRUMENT PANEL	1
4	D10566880.9	HARNESS ASSEMBLY PROJECTOR LAMP	1
5	D10561440.9	CABLE ASSEMBLY BATTERY TO STARTER GROUND	1
6	D10569020.9	CABLE ASSEMBLY BATTERY ISOLATOR TO STARTER SOLENOID	1
7	D10569030.9	CABLE ASSEMBLY BATTERY POSITIVE TO ISOLATOR	1
8	D10492030.9	BEACON LAMP	1
9	D10028020.9	HORN AND BRACKET ASSEMBLY	1
10	D10531210.9	FLASHER ASSEMBLY INDICATOR LIGHT	1
12	D10768850.9	UNIT CRUISE CONTROLLER	1
13	D10480920.9	ISOLATOR ASSEMBLY BATTERY	1
14	D10135490.9	SOCKET ASSEMBLY TRAILER ELECTRICAL	1
15	D10301710.9	CONTROL UNIT ASSEMBLY GLOW PLUG	1
16	D10520220.9	STARTER MOTOR ASSEMBLY	1
17	D10520230.9	ALTERNATOR ASSEMBLY (42 AMPERE)	1
18	D10524980.9	GASKET STARTER MOTOR	1
19	D10584540.9	BRACKET ASSEMBLY TOP BATTERY HOLD	1
20	D10568430.9	BRACKET BATTERY CUTOFF SWITCH MOUNTING	1
21	D10547100.9	RUBBER PAD BATTERY SUPPORT	1
22	D10589150.9	LAMP ASSEMBLY VEHICLE REGISTRATION PLATE	1
23	D10013470.9	PIN 1/8"X1.00" COTTER	1
24	D10547090.9	ROD BATTERY HOLD DOWN	2
25	D81501420.9	BOLT M8X1.25X15 HEX HEAD	2
26	D86500030.9	WASHER M8 SPRING LOCK	1
27	D81500340.9	BOLT M6X1.00X35-8.0 HEX HEAD	1
28	D10017930.9	NUT M6X1.00 HEX NYLOCK	1
29	D82500220.9	SCREW M6X1.00X15-8.8 HEX HEAD	2
30	D82501120.9	SCREW M5X0.80X16-6.6 HEX HEAD	1
31	D10101750.9	BOLT M10X1.50X25-8.8 HEX HEAD	3
32	D10525010.9	SPACER ALTERNATOR ADJUSTMENT	1
33	D81500470.9	BOLT M10X1.50X115 HEX HEAD	1
34	D83500090.9	NUT M10X1.50-8 HEX	2
35	D86500050.9	WASHER M10 SPRING LOCK	4
36	D85000040.9	WASHER 5/16" FLAT	2
37	D85500090.9	WASHER M5 FLAT	3
38	D10216680.9	SCREW M5X0.80X20 CROSS RECESSED PAN HEAD	3
39	D83500190.9	NUT M5X0.80 NYLOCK HEX	3
40	D82500920.9	SCREW M5X0.8X15 ALLEN	2
41	D82500670.9	SCREW 3.5X16 PAN HEAD TAPPING (ISO 1481)	2

Print Date: 30-Oct-2019

TABLE-69

HARNESS SUBASSEMBLY

Print Date: 30-Oct-2019

TABLE-69

HARNESS SUBASSEMBLY

Fig. No.	Part No.	Description	Qty
42	D10566920.9	HARNESS ASSEMBLY FENDER RH	1
43	D10566910.9	HARNESS ASSEMBLY FENDER LH	1
44	D10668190.9	HARNESS TRAILER SOCKET	1
45	D10566890.9	HARNESS ASSEMBLY RUNNING BOARD TO BEACON LAMP	1
46	D10566900.9	HARNESS ASSEMBLY PIGTAIL BEACON LAMP	1
47	D10744970.9	UNIT ENGINE SHUT OFF CONTROLLER TIMER (SEAT AND PARK OPC)	1
48	D10786890.9	KEY IGNITION LOCK FARMTRAC	1
49	D10513610.9	SWITCH ASSEMBLY STOP LAMP (SPRING TYPE)	1
50	D10645940.9	BUZZER ASSEMBLY	1
51	D10523390.9	BRACKET ASSEMBLY BEACON	4
52	D81502010.9	BOLT M4X20-6.8 HEX HEAD	4
53	D85500190.9	WASHER M4.0 FLAT	1
54	D86000090.9	WASHER 1/4 LOCK EXTERNAL TOOTH	1
55	D10768860.9	CRUISE CONTROL SOLENOID	1

Print Date: 30-Oct-2019

TABLE-70

HOOD FRONT SUBASSEMBLY

Print Date: 30-Oct-2019

TABLE-70

HOOD FRONT SUBASSEMBLY

Fig. No.	Part No.	Description	Qty
1	D10563880.9	HOOD TOP FRONT ASSEMBLY	1
2	D10563930.9	PANEL CLADDING HOOD SIDE RH	1
3	D10563920.9	PANEL CLADDING HOOD SIDE LH	1
4	D10563950.9	FRAME HEAD LAMP	1
5	D10563890.9	PANEL HOOD TOP	1
6	D10563900.9	PANEL HOOD SIDE LH	1
7	D10563910.9	PANEL HOOD SIDE RH	1
8	D10777370.9	WASHER M5 HOOD TOP FRONT	19
9	D10392470.9	SCREW M6 CROSS RECESSED	15
10	D82501160.9	SCREW M5X0.80X10 CROSS RECESSED PAN HEAD	19
11	D10777380.9	WASHER M6 HOOD TOP FRONT	11
12	D10563940.9	PANEL HOOD FRONT MIDDLE	1
13	D10559820.9	MESH TOP FRONT	1
14	D10563960.9	BEZEL HOOD FRONT CHROME	1
15	D85500550.9	WASHER STAR LOCK 6.0 DIA	6
16	D10575660.9	BRACKET HEAD LAMP MOUNTING FRAME LOWER LH	1
17	D10575670.9	BRACKET HEAD LAMP MOUNTING FRAME LOWER RH	1
18	D82500030.9	SCREW M5X0.80X10-6.6 HEX HEAD	4
19	D85500090.9	WASHER M5 FLAT	4
20	D10568750.9	CLAMP WIRING HARNESS	6
21	D82500220.9	SCREW M6X1.00X15-8.8 HEX HEAD	30
22	D85500040.9	WASHER M6 FLAT	62
23	D81501580.9	BOLT M8X1.25X16 HEX HEAD FLANGED	7
24	D10576960.9	SHEET HEAT INSULATION HOOD TOP PANEL	1
25	D10576970.9	SHEET HEAT INSULATION HOOD SIDE PANEL LH	1
26	D10659950.9	BRACKET ASSEMBLY GAS STRUT MOUNTING FRONT	1
27	D10662370.9	BRACKET HINGE TOP FRONT HOOD	1
28	D83500220.9	NUT M6X1.00-5 HEX	13
29	D10808860.9	COVER AIR DEFLECTOR HOOD FRONT	1
30	D10563990.9	PANEL HOOD FRONT LOWER	1
31	D10559790.9	MESH LOWER FRONT	1
32	D10563970.9	PANEL HOOD FRONT LOWER SIDE LH	1
33	D10559800.9	MESH SIDE LH	1
34	D10568050.9	BRACKET RADIATOR SEALING SIDE LOWER LH	1
35	D85500560.9	WASHER STAR LOCK 10.0 DIA	10
36	D10563980.9	PANEL HOOD FRONT LOWER SIDE RH	1
37	D10559810.9	MESH SIDE RH	1
38	D10568060.9	BRACKET RADIATOR SEALING SIDE LOWER RH	1
39	D10568030.9	BRACKET RADIATOR SEALING SIDE UPPER LH	1
40	D10568040.9	BRACKET RADIATOR SEALING SIDE UPPER RH	1

Print Date: 30-Oct-2019

TABLE-70

HOOD FRONT SUBASSEMBLY

Print Date: 30-Oct-2019

TABLE-70

HOOD FRONT SUBASSEMBLY

Fig. No.	Part No.	Description	Qty
41	D10570600.9	HEAD LAMP ASSEMBLY LHD (RH)	1
42	D10575650.9	BRACKET HEAD LAMP MOUNTING FRAME RH	1
43	D10034950.9	SCREW M6X1.00X20-6.6 HEX HEAD	17
44	D10570590.9	HEAD LAMP ASSEMBLY LHD (LH)	1
45	D10575640.9	BRACKET HEAD LAMP MOUNTING FRAME LH	1
46	D10562250.9	BRACKET ASSEMBLY PIN MOUNTING LATCH HOOD	1
47	D10568390.9	BEADING FRONT HOOD LOWER	1
48	D10568350.9	BEADING RADIATOR SEALING TOP LH	1
49	D10568360.9	BEADING RADIATOR SEALING TOP RH	1
50	D10568370.9	BEADING RADIATOR SEALING SIDE	2
51	D10573740.9	FOAM SEALING HEAD LAMP	2

Print Date: 30-Oct-2019

TABLE-71

LATCH ASSEMBLY HOOD FRONT

157

Print Date: 30-Oct-2019

TABLE-71

LATCH ASSEMBLY HOOD FRONT

Fig. No.	Part No.	Description	Qty
1	D10587650.9	KNOB PULL ROD LATCH HOOD	1
2	D10560880.9	SPRING LATCH HOOD	1
3	D10560870.9	PULL ROD LATCH HOOD	1
4	D10560830.9	LATCH ASSEMBLY HOOD	1
5	D10560840.9	PLATE REAR LATCH HOOD	1
6	D10560850.9	PLATE FRONT LATCH HOOD	1
7	D10560890.9	PIN LATCH HOOD	1
8	D88400030.9	PIN 2.5X25.0 COTTER	1
9	D10034590.9	WASHER M8 FLAT	1
10	D81500110.9	BOLT M8X1.25X20-8.8 HEX HEAD	2
11	D86500030.9	WASHER M8 SPRING LOCK	2

Print Date: 30-Oct-2019

TABLE-72

COVER ASSEMBLY ENGINE SIDE RH

159

Print Date: 30-Oct-2019

TABLE-72

COVER ASSEMBLY ENGINE SIDE RH

Fig. No.	Part No.	Description	Qty
1	D82501140.9	SCREW M8X1.25X16 TRUSS HEAD CROSS SLOTTED	1
2	D10034590.9	WASHER M8 FLAT	2
3	D86500030.9	WASHER M8 SPRING LOCK	2
4	D81500110.9	BOLT M8X1.25X20-8.8 HEX HEAD	2
5	D85500090.9	WASHER M5 FLAT	2
6	D82501120.9	SCREW M5X0.80X16-6.6 HEX HEAD	2
7	D10573710.9	PANEL ENGINE SIDE COVER RH	1
8	D10583190.9	BRACKET ASSEMBLY ENGINE SIDE COVER RH	1

Print Date: 30-Oct-2019

TABLE-73

COVER ASSEMBLY ENGINE SIDE LH

Print Date: 30-Oct-2019

TABLE-73

COVER ASSEMBLY ENGINE SIDE LH

Fig. No.	Part No.	Description	Qty
1	D10573700.9	PANEL ENGINE SIDE COVER LH	1
2	D10216680.9	SCREW M5X0.80X20 CROSS RECESSED PAN HEAD	2
3	D85500090.9	WASHER M5 FLAT	2
4	D82501140.9	SCREW M8X1.25X16 TRUSS HEAD CROSS SLOTTED	1
5	D10583180.9	BRACKET ASSEMBLY ENGINE SIDE COVER LH	1
6	D10778030.9	BRACKET ASSEMBLY ENGINE SIDE COVER INNER LH	1
7	D81500110.9	BOLT M8X1.25X20-8.8 HEX HEAD	1
8	D86500030.9	WASHER M8 SPRING LOCK	1
9	D85500050.9	WASHER M8 FLAT	1
10	D82500220.9	SCREW M6X1.00X15-8.8 HEX HEAD	2
11	D85500040.9	WASHER M6 FLAT	2

Print Date: 30-Oct-2019

TABLE-74

GUIDE SUPPORT AND GAS SPRING FRONT HOOD SUBASSEMBLY

Print Date: 30-Oct-2019

TABLE-74

GUIDE SUPPORT AND GAS SPRING FRONT HOOD SUBASSEMBLY

Fig. No.	Part No.	Description	Qty
1	D81503090.9	BOLT M8X1.25X16-8.8 HEX HEAD	2
2	D83500160.9	NUT M8X1.25 NYLOCK HEX	2
3	D10656550.9	STRUT BONNET OPENING	1
4	D10659960.9	BRACKET ASSEMBLY GAS STRUT MOUNTING REAR	1
5	D83500110.9	NUT M8X1.25-8 HEX	2

Print Date: 30-Oct-2019

TABLE-75

GUIDE SUPPORT AND RADIATOR FRAME SUBASSEMBLY

Print Date: 30-Oct-2019

TABLE-75

GUIDE SUPPORT AND RADIATOR FRAME SUBASSEMBLY

Fig. No.	Part No.	Description	Qty
1	D81501420.9	BOLT M8X1.25X15 HEX HEAD	3
2	D10654160.9	BRACKET ASSEMBLY GUIDE SUPPORT LH	1
5	D83500110.9	NUT M8X1.25-8 HEX	2
6	D10034590.9	WASHER M8 FLAT	3

Print Date: 30-Oct-2019

TABLE-76

HOOD REAR SUBASSEMBLY

Print Date: 30-Oct-2019

TABLE-76

HOOD REAR SUBASSEMBLY

Fig. No.	Part No.	Description	Qty
1	D10562590.9	CLUSTER ASSEMBLY INSTRUMENT	1
2	D10026540.9	GROMMET HAND THROTTLE CONTROL LEVER	1
3	D10565410.9	HOOD ASSEMBLY REAR	1
4	D83500220.9	NUT M6X1.00-5 HEX	2
5	D82500050.9	SCREW M6X1.00X12-6.8 HEX HEAD	2
6	D10565480.9	CLIP NUT M6	4
7	D10565460.9	BRACKET CLUSTER MOUNTING LH	1
8	D10565470.9	BRACKET CLUSTER MOUNTING RH	1
9	D10560720.9	SWITCH ASSEMBLY COMBINATION	1
10	D10568400.9	BEADING REAR HOOD LH	1
11	D10568410.9	BEADING REAR HOOD RH	1
12	D10571520.9	BEADING REAR HOOD MIDDLE	1
13	D10590410.9	SOCKET MOBILE CHARGER ASSEMBLY	1
14	D10498410.9	SWITCH ASSEMBLY HEATER AND STARTER	1
15	D10495450.9	SWITCH ASSEMBLY BEACON LAMP	1
15-1	D10842940.9	SWITCH ASSEMBLY HAZARD	1
16	D10768830.9	SWITCH ASSEMBLY CRUISE CONTROL	1
17	D10612700.9	PANEL HOOD REAR (HST)	1
18	D82501190.9	SCREW M6X1.0X16 TRUSS HEAD CROSS SLOTTED	6
19	D10565440.9	GROMMET REAR HOOD	1
20	D85500040.9	WASHER M6 FLAT	4
21	D82500220.9	SCREW M6X1.00X15-8.8 HEX HEAD	4
22	D10635460.9	FOAM SEALING REAR HOOD	1

Print Date: 30-Oct-2019

TABLE-77

ROPS FOLDABLE SUBASSEMBLY COMPACT

Print Date: 30-Oct-2019

TABLE-77

ROPS FOLDABLE SUBASSEMBLY COMPACT

Fig. No.	Part No.	Description	Qty
1	D83500290.9	NUT M12X1.75 HEX	2
2	D81500170.9	BOLT M12X1.75X55-10.9 HEX HEAD	2
3	D83500670.9	NUT M20X2.50 HEX NYLOCK	2
4	D10014880.9	PIN AND RING ASSEMBLY LOWER LIFT LINK LYNCH	2
5	D10549890.9	PIN ROPS LOCKING	2
6	D10563560.9	FRAME ASSEMBLY ROPS FOLDABLE COMPACT	1
7	D10549880.9	BUSH COLLAR ROPS FRAME	2
8	D10768890.9	BASE ASSEMBLY ROPS FOLDABLE COMPACT HST	1
9	D83500090.9	NUT M10X1.50-8 HEX	10
10	D83500110.9	NUT M8X1.25-8 HEX	5
11	D81500060.9	BOLT M10X1.50X30-8.8 HEX HEAD	2
12	D85500140.9	WASHER M10 FLAT	2
13	D85500050.9	WASHER M8 FLAT	2
14	D10568790.9	BOX ASSEMBLY TOOL COMPACT (PLASTIC)	1
15	D86500050.9	WASHER M10 SPRING LOCK	2
16	D10535780.9	LAMP ASSEMBLY PLOUGH	1
17	D81500110.9	BOLT M8X1.25X20-8.8 HEX HEAD	2
18	D86500030.9	WASHER M8 SPRING LOCK	2
19	D81500740.9	BOLT M14X2.00X35-10.9 HEX HEAD LOCK	4
20	D81503400.9	BOLT M12X35-10.9 HEX HEAD	2
21	D86500070.9	WASHER M14 SPRING LOCK	4
22	D85500060.9	WASHER M12 FLAT	2
23	D86500020.9	WASHER M12 SPRING LOCK	2
24	D85500510.9	WASHER M14X1.5 FLAT	4
25	D81503130.9	BOLT M20X2.5X115-8.8 HEX HEAD	2
26	D10339690.9	RIVET 4X6.0MM (CLINCH TYPE)	4
27	D10694250.9	DECAL ROPS E-MARKED	1
28	D81502010.9	BOLT M4X20-6.8 HEX HEAD	4
29	D10523390.9	BRACKET ASSEMBLY BEACON	1
30	D85500190.9	WASHER M4.0 FLAT	4
31	D10556200.9	VALVE ASSEMBLY HYDRAULIC CONTROL SINGLE SPOOL (DOUBLE ACTING)	1
32	D10564070.9	BRACKET ASSEMBLY SUPPORT FENDER (WITH ROPS)	1
33	D83500060.9	NUT M8X1.25-6 HEX	2
34	D10215860.9	KNOB HAND THROTTLE CONTROL LEVER	1
35	D10570140.9	LEVER SPOOL VALVE	1
36	D81503450.9	BOLT M8X1.25X30 HEX SOCKET HEAD	2

Print Date: 30-Oct-2019

TABLE-78

FENDER SUBASSEMBLY (HST NON JOYSTICK)

171

Print Date: 30-Oct-2019

TABLE-78

FENDER SUBASSEMBLY (HST NON JOYSTICK)

Fig. No.	Part No.	Description	Qty
1	D10561010.9	CONSOLE LH RANGE LEVER	1
2	D10775280AC.9	FENDER ASSEMBLY RH	1
3	D10696080.9	FENDER ASSEMBLY LH	1
4	D83500090.9	NUT M10X1.50-8 HEX	9
5	D84500170.9	STUD B M8X1.25X42-8.8	4
6	D84500160.9	STUD B M8X1.25X60-8.8	2
7	D10567570.9	HANDLE FENDER ASSEMBLY LH	1
8	D10567560.9	HANDLE FENDER ASSEMBLY RH	1
9	D10568780.9	BIDING RUBBER REAR LIGHT COVER	2
10	D10580840.9	LAMP ASSEMBLY FENDER REAR RH (LED)	1
11	D10580850.9	LAMP ASSEMBLY FENDER REAR LH (LED)	1
12	D85500130.9	WASHER M8 FLAT	18
13	D83500110.9	NUT M8X1.25-8 HEX	10
14	D86500030.9	WASHER M8 SPRING LOCK	14
15	D81500480.9	BOLT M10X1.50X30-6.6 HEX HEAD	18
16	D85500010.9	WASHER M10 FLAT	18
17	D86500090.9	WASHER M10 SPRING LOCK	10
18	D10566480.9	BRACKET ASSEMBLY REGISTRATION PLATE MOUNTING	1
19	D83500060.9	NUT M8X1.25-6 HEX	4
20	D83500010.9	NUT M5X0.8-6 PLATED	2
21	D10534070.9	PLATE DATA STATUTORY	1
22	D81503090.9	BOLT M8X1.25X16-8.8 HEX HEAD	6
23	D10339690.9	RIVET 4X6.0MM (CLINCH TYPE)	4
24	D93100360.9	PLUG FENDER DIA 11.0	2
25	D93100350.9	PLUG M10X1.5 SQUARE HEAD (DELPHINIUM BLUE)	2
26	D10783800.9	PAD HYDRAULIC LIFT CONTROL LEVER UPPER STOPPER	1
27	D10000640.9	PIN 1/16"X0.50" COTTER	1
28	D10668670.9	KNOB HYDRAULIC LIFT CONTROL LEVER STOP	1
29	D10664480.9	BRACKET ASSEMBLY HOLDING GEAR SHIFT SWITCH	1
30	D10716760.9	SWITCH ASSEMBLY (NO TYPE)	1
31	D81500110.9	BOLT M8X1.25X20-8.8 HEX HEAD	2
32	D82501160.9	SCREW M5X0.80X10 CROSS RECESSED PAN HEAD	4
33	D10554130.9	REFLECTOR REAR	2
34	D10663690.9	BRACKET REAR REFLECTOR RH	1
35	D10663680.9	BRACKET REAR REFLECTOR LH	1
36	D81500360.9	BOLT M6X1.00X16-9.8 HEX HEAD	14
37	D85500040.9	WASHER M6 FLAT	12
38	D83500350.9	NUT M6X1.00 NYLOCK HEX	12
39	D10696130.9	FLAP FENDER RH	1
40	D10696120.9	FLAP FENDER LH	1

Print Date: 30-Oct-2019

TABLE-78

FENDER SUBASSEMBLY (HST NON JOYSTICK)

173

Print Date: 30-Oct-2019

TABLE-78

FENDER SUBASSEMBLY (HST NON JOYSTICK)

Fig. No.	Part No.	Description	Qty
41	D10718590.9	CONSOLE JOYSTICK LOADER ACTUATION	1
42	D85500110.9	WASHER M6 FLAT	2
43	D10783770.9	PAD ASSEMBLY HYDRAULIC LIFT CONTROL LEVER LOWER STOPPER	1
44	D10433490.9	GROMMET TOOL BOX (DIA 9)	1
45	D93100550.9	PLUG DIA 27	3
46	D10871140.9	COVER CONSOLE JOYSTICK	1
47	D82501190.9	SCREW M6X1.0X16 TRUSS HEAD CROSS SLOTTED	2
48	D10778110.9	BRACKET JOYSTICK LOADER ACTUATION MOUNTING FRONT	1
49	D10871150.9	BRACKET ASSEMBLY MOUNTING COVER CONSOLE	1
50	D10892370.9	SWITCH ASSEMBLY PTO OVERDRIVE	1
51	D10495450.9	SWITCH ASSEMBLY BEACON LAMP	1

Print Date: 30-Oct-2019

TABLE-79

BOARD RUNNING RH AND LH SUBASSEMBLY

175

Print Date: 30-Oct-2019

TABLE-79

BOARD RUNNING RH AND LH SUBASSEMBLY

Fig. No.	Part No.	Description	Qty
1	D10566360.9	BRACKET ASSEMBLY RUNNING BOARD SUPPORT FRONT LH	1
2	D83500060.9	NUT M8X1.25-6 HEX	21
3	D10566330.9	BRACKET ASSEMBLY RUNNING BOARD SUPPORT FRONT RH	1
4	D10562340.9	GROMMET FUEL TANK	2
5	D10152630.9	SCREW M8X1.25X20 COUNTERSUNK SOCKET HEAD	7
6	D10775300.9	BRACKET ASSEMBLY JOYSTICK CABLE MOUNTING	1
7	D10748040.9	BRACKET ASSEMBLY SHAFT PEDAL CONTROL MOUNTING	1
8	D83500110.9	NUT M8X1.25-8 HEX	2
10	D10769030.9	PLATE MOUNTING BRAKE SWITCH LH	1
11	D81500110.9	BOLT M8X1.25X20-8.8 HEX HEAD	15
12	D10610610.9	MAT RUNNING BOARD FRONT	1
13	D86500090.9	WASHER M10 SPRING LOCK	8
14	D10614820.9	CAP DIPSTICK	1
15	D86500030.9	WASHER M8 SPRING LOCK	13
16	D85500050.9	WASHER M8 FLAT	15
17	D82501140.9	SCREW M8X1.25X16 TRUSS HEAD CROSS SLOTTED	3
18	D10570580.9	PIN PUSH RUNNING BOARD MAT	7
19	D10610620.9	COVER DASHBOARD LOWER	1
20	D10609650.9	BOARD RUNNING ASSEMBLY CENTER	1
21	D83500220.9	NUT M6X1.00-5 HEX	1
22	D10607580.9	CONSOLE GEAR AND DIFFERENTIAL HOUSING	1
23	D10561040.9	COVER ASSEMBLY DRIVER SEAT FLOOR	1
24	D10607590.9	BOARD RUNNING ASSEMBLY RH	1
25	D10607650.9	BOARD RUNNING ASSEMBLY LH	1
26	D84500340.9	STUD B M10X1.5X40-10.9	4
27	D10101750.9	BOLT M10X1.50X25-8.8 HEX HEAD	4
28	D82501150.9	SCREW M8X1.25X16 BUTTON HEAD SOCKET CAP	2
29	D83500130.9	NUT M10X1.50-10P HEX	4
30	D10873120.9	BRACKET ASSEMBLY TENSION SPRING MOUNTING	1
31	D10493580.9	PAD BRAKE AND CLUTCH PEDAL STOP	2

Print Date: 30-Oct-2019

TABLE-80

SEAT DRIVER SUBASSEMBLY (EXPORT)

Print Date: 30-Oct-2019

TABLE-80

SEAT DRIVER SUBASSEMBLY (EXPORT)

Fig. No.	Part No.	Description	Qty
1	D10563080.9	SEAT ASSEMBLY DRIVER (EXPORT)	1
2	D86500050.9	WASHER M10 SPRING LOCK	4
3	D81500060.9	BOLT M10X1.50X30-8.8 HEX HEAD	4
4	D85500140.9	WASHER M10 FLAT	4

Print Date: 30-Oct-2019

TABLE-81

MIRROR AND FRONT LAMP SUBASSEMBLY

Print Date: 30-Oct-2019

TABLE-81

MIRROR AND FRONT LAMP SUBASSEMBLY

Fig. No.	Part No.	Description	Qty
1	D10570940.9	BRACKET ASSEMBLY FRONT LAMP MOUNTING LH	1
2	D83500220.9	NUT M6X1.00-5 HEX	2
3	D10570950.9	BRACKET ASSEMBLY FRONT LAMP MOUNTING RH	1
4	D10561350.9	MIRROR AND ROD ASSEMBLY REAR VIEW RH	1
5	D83500110.9	NUT M8X1.25-8 HEX	4
6	D81503580.9	BOLT M8X1.25X25 HEX SOCKET HEAD	4
7	D10580820.9	LAMP ASSEMBLY FENDER FRONT RH (LED)	1
8	D10580830.9	LAMP ASSEMBLY FENDER FRONT LH (LED)	1
9	D10561340.9	MIRROR AND ROD ASSEMBLY REAR VIEW LH	1
10	D83500700.9	NUT M8X1.25-6.8 DOME HEX FLANGE	1

Print Date: 30-Oct-2019

TABLE-82

DECAL AND BADGES MODEL IDENTIFICATION ASSEMBLY HST

Print Date: 30-Oct-2019

TABLE-82

DECAL AND BADGES MODEL IDENTIFICATION ASSEMBLY HST

Fig. No.	Part No.	Description	Qty
1	D10588450.9	DECAL QRC CYLINDER OPEN	1
2	D10588440.9	DECAL QRC CYLINDER CLOSED	1
3	D10570890.9	DECAL HOT SURFACE WARNING	1
4	D10529560.9	DECAL ISOLATOR ASSEMBLY BATTERY	1
5	D10647790.9	DECAL CAUTION ALTERNATOR	1
6	D10647780.9	DECAL TRACTOR SAFETY INSTRUCTIONS	1
7	D10647820.9	DECAL CAUTION AIR CLEANER	1
8	D10616540.9	DECAL CLUTCH PTO	1
9	D10647800.9	DECAL CAUTION HYDRAULIC AND ENGINE	1
10	D10647910.9	DECAL SEAT BELT WARNING	1
11	D10647890.9	DECAL RADIATOR CAP WARNING	1
12	D10647840.9	DECAL PTO GUARD WARNING	1
13	D10647810.9	DECAL PTO WARNING	1
14	D10647870.9	DECAL DANGER BATTERY	1
15	D10647850.9	DECAL BELT AND FAN WARNING	1
16	D10570910.9	DECAL FARMTRAC LOGO STEERING WHEEL	1
17	D10589170.9	BADGE FRONT HOOD FARMTRAC	1
18	D10570810.9	BADGE FRONT FARMTRAC LH	1
19	D10570820.9	BADGE FRONT FARMTRAC RH	1
20	D10570830.9	DECAL HAND ACCELERATOR	1
21	D10571300.9	DECAL POWERED WITH MITSUBISHI ENGINE (RED)	1
22	D10570800.9	DECAL RANGE	1
23	D10616560.9	DECAL REAR PTO	1
24	D10570780.9	DECAL 4WD ENGAGE DISENGAGE	1
25	D10570340.9	DECAL POSITION LEVER	1
26	D10570070.9	DECAL STARTING SWITCH BLUE	1
27	D10570050.9	DECAL PARKING BRAKE	1
28	D10570030.9	DECAL OIL IMMERSED BRAKE (RED)	1
29	D10570020.9	DECAL DIFFERENTIAL LOCK	1
30	D10616550.9	DECAL MID PTO	1
31	D10616530.9	DECAL CRUISE LOCK	1
34	D10616570.9	DECAL PTO LEVER INSTRUCTION	2
35	D10616580.9	DECAL VEHCILE PARKING WARNING	1
36	D10616590.9	DECAL VEHCILE WARNING	1
37	D10616510.9	DECAL RANGE GEAR SHIFT LEVER INSTRUCTION	1
38	D10692790.9	BADGE HST	2
39	D10588640.9	BADGE 26 HP	2